Test Report

Airtightness test of the vapour control layer including connections
System "HYGRO'VAP"

Manufacturer:
Ubbink France

Airtightness system: Surface sealing

Darmstadt 12.11.2024

Passive House Institute
Rheinstr. 44/46
64291 Darmstadt, Germany
www.passiv.de

Commissioned by:	Ubbink France ZA la Malabry, 13 Rue de Bretagne 44240 La Chapelle-sur-Erdre France
Product:	**Airtightness system consisting of** 1. HYGRO'VAP: humidity variable hydrosafe vapour control layer and airtightness membrane 2. Adhésif Ubbink intérieur: simple-face tape for the membrane-to-membrane joints 3. Adhésif Ubbink extérieur: simple-face tape for membrane-to-osb joints 4. Colle d'étanchéité pare-vapeur Ubbink: cartridge glue for membrane-to-concrete joints
Product name:	HYGRO'VAP
Tested size:	1.5 metre rolls

1. Introduction

Airtightness across the surface is a central prerequisite for an effective airtightness concept. A good level of airtightness of the building envelope is an essential element for its overall functioning, particularly in energy efficient buildings. This investigation took place under the most realistic possible boundary conditions within the framework of certification as a Passive House component in order to ensure that the tested products function in the installed state. In particular, the connection of the membrane to typical adjacent materials will be examined in the context of certification. With respect to the product system, this test examined the bonding of the membranes with each other and bonding with concrete and hard engineered wood panels (here: OSB), as well as the adhesive materials used.

2. Criteria

The values specified for PH certification of surface sealing can be taken from Table 1 below:

Table 1: Requirement classes for the certification of surface sealing products according to Passive House Institute specifications

Class	**Air permeability based on area** @ 50 Pa [m³/(hm²)]
ph**A**	≤ 0.10
ph**B**	≤ 0.18
ph**C**	≤ 0.25

These apply for the overall performance of a product system specified by the client, consisting of several components.

In addition, comprehensible guidelines/instructions for use must be provided for installation of the product, on which the test setup will be based. These must be made available to all testers.

Testing of moisture permeability and the characteristic values for moisture for different ambient humidity levels do not constitute part of this test.

3. Materials to be tested

The required membranes and adhesive tapes for joining the different connection situations were supplied by the client.

The adhesive tape Adhésif Ubbink intérieur was used for overlapping joining of the vapour retardant membrane in accordance with the manufacturer's instructions. For the connection with the OSB panels, the adhesive tape Adhésif Ubbink extérieur was used. The connection with concrete was carried out using the cartridge adhesive Colle d'étanchéité pare-vapeur Ubbink. The use and application of the adhesive tape and joint adhesive took place in accordance with the manufacturer's directions which are described in the instructions for use.

The following products were delivered by the client on 18.10.2024:

- HYGRO'VAP (roll: width 1.5 m, length 50 m)
- Adhésif Ubbink intérieur with instructions for use
- Adhésif Ubbink extérieur with instructions for use
- Colle d'étanchéité pare-vapeur Ubbink with instructions for use

4. Setup for the membrane and connections

The membrane roll was cut into two metre pieces which were clamped into the test apparatus across their full width so that they extended on all sides. For sealing, a frame which was identical in construction to the sub-frame of the test apparatus was placed on the apparatus. The frame and counter frames were each equipped with a 5 cm wide sealing surface which served as a support for the airtight membrane. The counter frame was tightened to a defined torque using screws and a torque wrench. Tension-free and uniform installation in the test stand was possible due to the even pressure of the counter frame.

For the connection to OSB or concrete, an OSB panel or a concrete slab was placed in the fixture provided for this purpose. After clamping the piece of membrane, this was cut out along the respective panel. The piece of membrane was thus "suspended in the air" and surrounded the respective panel. Depending on the type of panel, either Adhésif Ubbink extérieur (OSB panel) or Colle d'étanchéité pare-vapeur Ubbink (concrete slab) was used to join the membrane with the panel. Here it is important to ensure that the membrane is "suspended in the air" so that pressing the adhesive tape is only possible to a limited extent. This is equivalent to the usual procedure e.g. when laying the membrane in the roof area.

For the connection of the membrane to the concrete, cartridge adhesive Colle d'étanchéité pare-vapeur Ubbink was used. The connections were left at least 15 hours to cure. The climatic conditions of storage correspond to the conditions specified in chapter 7.

Each test setup (membrane to membrane, membrane to OSB and membrane to concrete) was created and tested three times in order to minimise any influences by workers.

4.1 Membrane to membrane

The connection or overlapping of two pieces of membranes was carried out using the adhesive tape Adhésif Ubbink intérieur in accordance with the manufacturer's instructions. For this, as described in the manufacturer's instructions, the lengths of membrane were placed together overlapping each other by 10 cm and then the adhesive tape was applied equally on both pieces. It was ensured that application of the tape took place with the membrane “suspended in the air” so that pressing the adhesive tape was only possible to a limited extent.

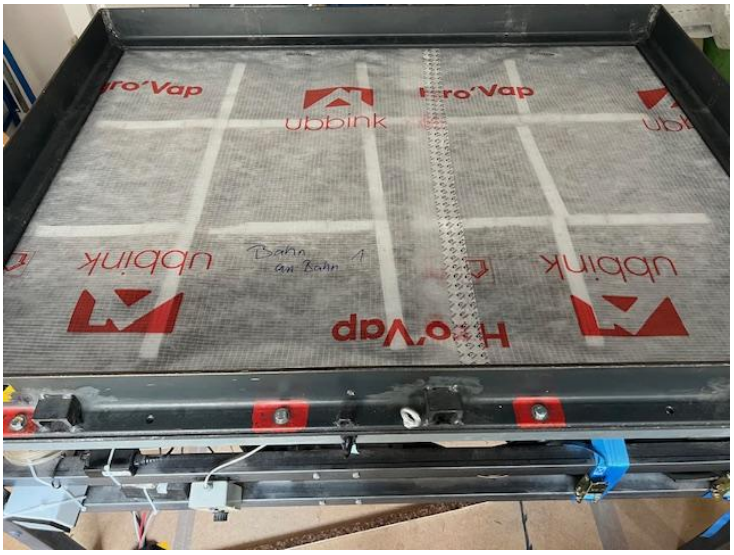

Fig. 1: Connection membrane to membrane with Adhésif Ubbink intérieur in the test apparatus.

4.2 Membrane to OSB panel

The adhesive tape Adhésif Ubbink extérieur was used for connecting the OSB panel. Here the long sides were connected first. One half of the tape width was attached to the OSB panel and the other half was attached to the membrane. Finally the short sides were joined, overlapping with the full width of the adhesive tape.

Fig. 2: **Cut out membrane with OSB panel joined to the membrane on all four sides using Adhésif Ubbink extérieur.**

4.3 Membrane to concrete

The adhesive Colle d'étanchéité pare-vapeur Ubbink was used for the membrane to concrete connection. Colle d'étanchéité pare-vapeur Ubbink is a “connection-adhesive”, applied with an injection cartridge for airtight joints. According to the manufacturer’s instructions, a continuous bead approx. 5 mm wide has to be applied, in order to guarantee an airtight joint. The membrane, with an overlap, was glued to the concrete with a 5 mm bead. Following the instructions, the membrane was gently pressed down. According to the manufacturer the adhesive has to dry, in order to create a tight connection. The time of curing depends on the room temperature and the humidity. The manufacturer does not make an exact statement about the time. In this case it was left to cure for three days. Airtightness measurements or blowing in insulation material before complete curing can lead to leakages.

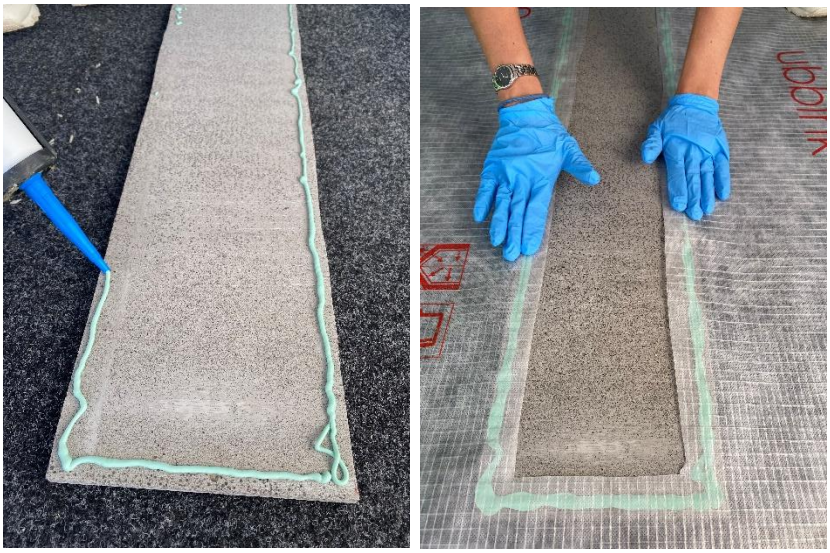

Fig. 3: **Membrane to concrete connection using Colle d'étanchéité pare-vapeur Ubbink in the test apparatus (left). Membrane to concrete connection in detail (right).**

5. Test procedure

After setting up in the test stand and attaching the membrane, a measurement was carried out in compliance with DIN EN 12114. For this measurement, the following pressure stages were set for positive and negative pressure: 50, 100, 150, 200, 250, 300, 350 Pa. First the residual leakage of the test stand for all pressure stages was measured and documented for each measurement (reference measurement). For this, the test apparatus was closed using an airtight board. The infiltration air of the test stand determined thus was deducted from the result of the measurement afterwards.

In each measurement, the conveyed volume flow was measured and recorded for each individual pressure difference. With these pairs of measured values, it was possible to calculate the leakage coefficient ***C*** in accordance with DIN EN 12114 Appendix B.

From the two series of reference measurements and the two series of actual measurements, smoothing functions were determined through a regression analysis. After deducting the leakage of the test stand itself (reference measurement), the leakage flow was determined for the reference pressure difference of 50 Pa as an average value of the results from the series of negative and positive pressure measurements. This value was divided by the sample area in order to obtain the specific leakage flow per square metre. The free area of the sample is 1.72 m² or 1.48 m² with deduction of the cut-out for the OSB panel or concrete slab.

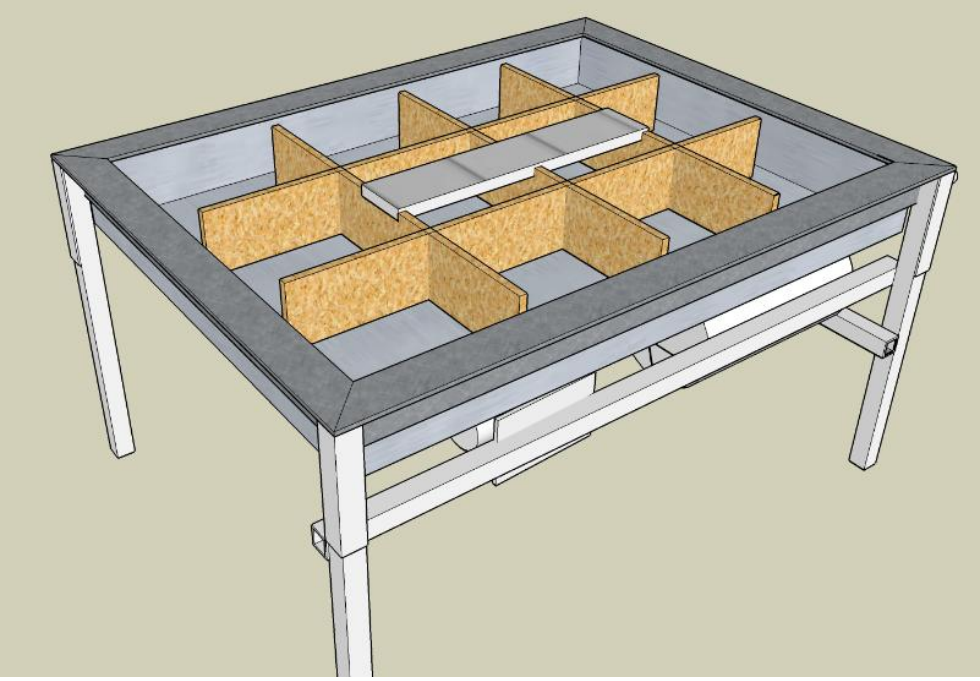

Fig. 4: **Sketch of the test apparatus with a fixture for the respective panels**

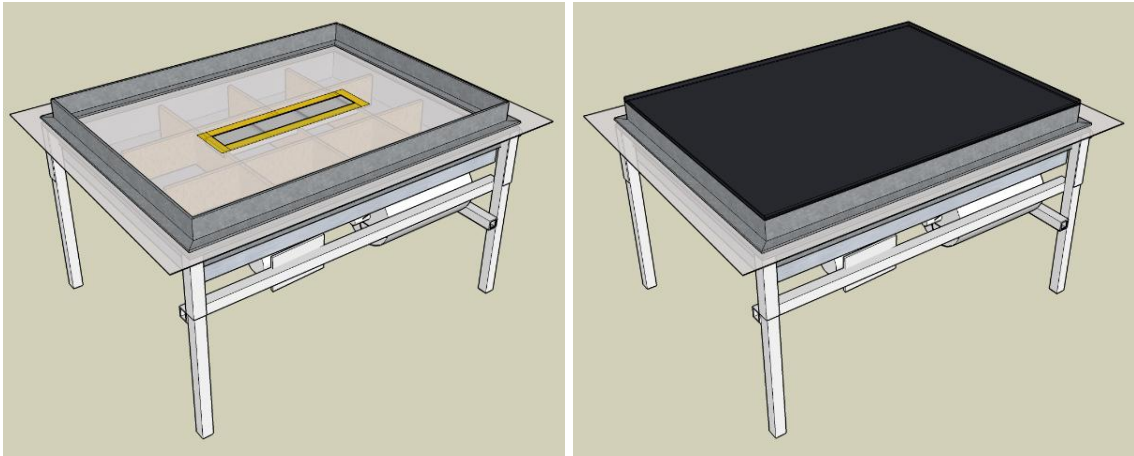

Fig. 5: **Sketch of the test apparatus with the clamped membrane and inserted panel which is joined to the membrane with adhesive tape (yellow) (left). Test apparatus sealed with the cover panel for determining the test stand leakage (right).**

The measurements of the examined airtightness system took place in the time period from 21.10.2024 to 30.10.2024.

6. Test results

The test results are shown in the following tables and figures, sorted according to the connection methods. The requirement classes for the certification of surface sealing systems are additionally entered in the diagrams.

In the following diagrams with a double logarithmic axis scale, some of the measured values that were determined are not recognisable because these are less than the smallest depicted y-axis value.

6.1 Membrane to membrane

Connection to	
Membrane on its own	
Membrane to membrane	x
Membrane to OSB	
Membrane to concrete	

Table 2: Test results of the three measurements with the membrane to membrane connection using Adhésif Ubbink intérieur

examined area	1,72 m²

Pressure stages	Pa	50	100	150	200	250	300	350
Hygro vap to Hygro vap #1								
total volume flow	m³/h	0,00	0,10	0,14	0,17	0,20	0,23	0,26
test stand leakage	m³/h	0,02	0,17	0,21	0,25	0,28	0,30	0,33
specific air volume flow	m³/h	0,00	0,00	0,00	0,00	0,00	0,00	0,00
leakage volume flow based on area	m³/(h m²)	0,00	0,00	0,00	0,00	0,00	0,00	0,00
Hygro vap to Hygro vap #2								
total volume flow	m³/h	0,18	0,38	0,45	0,51	0,57	0,61	0,66
test stand leakage	m³/h	0,08	0,22	0,25	0,27	0,29	0,30	0,31
specific air volume flow	m³/h	0,10	0,16	0,21	0,25	0,29	0,32	0,36
leakage volume flow based on area	m³/(h m²)	0,06	0,09	0,12	0,15	0,17	0,19	0,21
Hygro vap to Hygro vap #3								
total volume flow	m³/h	0,29	0,47	0,52	0,57	0,61	0,64	0,67
test stand leakage	m³/h	0,08	0,24	0,28	0,31	0,34	0,36	0,38
specific air volume flow	m³/h	0,22	0,24	0,26	0,27	0,29	0,30	0,32
leakage volume flow based on area	m³/(h m²)	0,13	0,14	0,15	0,16	0,17	0,18	0,18

Average

Q50 (PHI - assessment) **0,06** m³/(h m²)

resulting in an airtightness class of **A** according to PHI Q50 ≤ 0,1

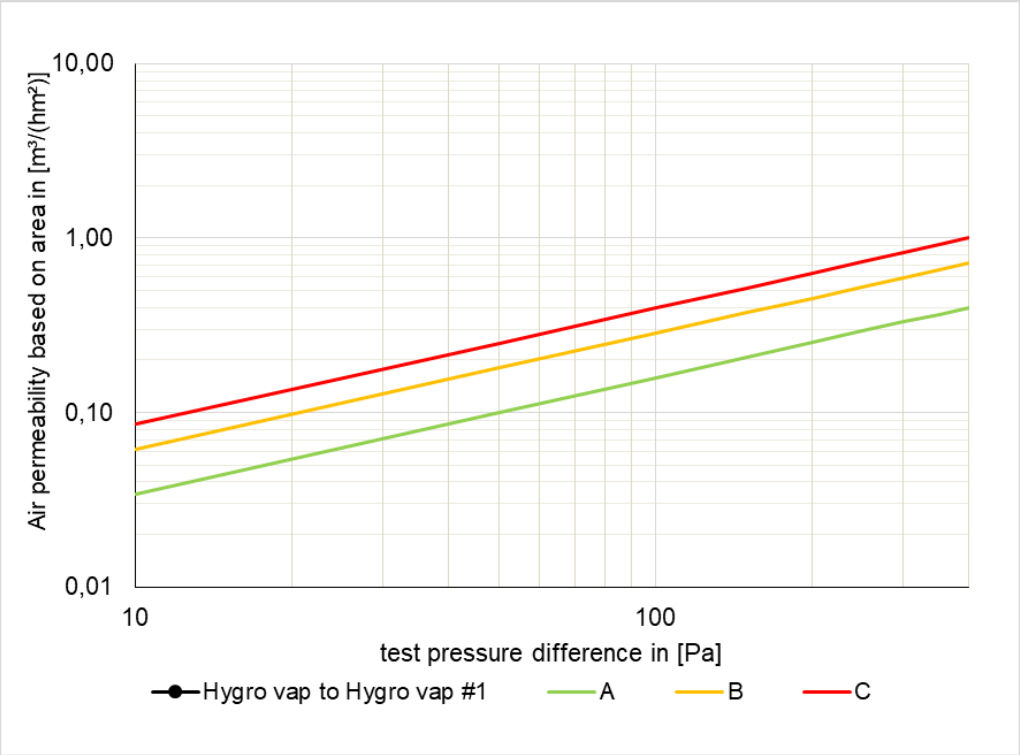

Fig. 6: **Series of measurements for the sample "HYGRO'VAP to HYGRO'VAP #1". The Certification Classes A to C according to the PHI are entered in addition.**

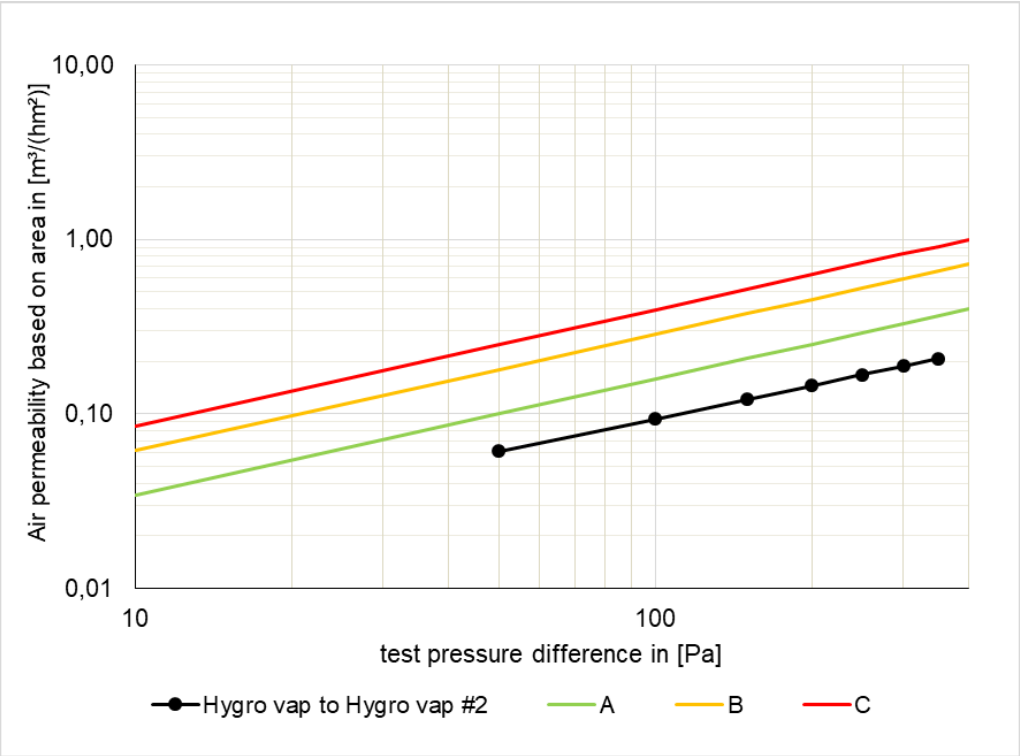

Fig. 7: **Series of measurements for the sample "HYGRO'VAP to HYGRO'VAP #2". The Certification Classes A to C according to the PHI are entered in addition.**

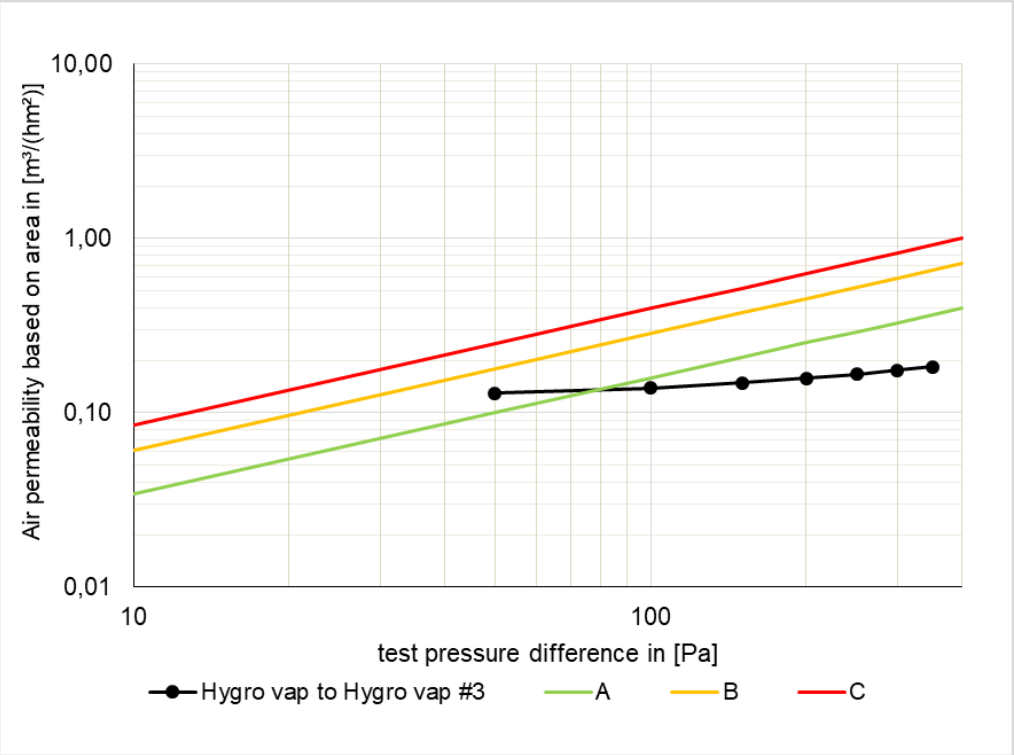

Fig. 8: **Series of measurements for the sample "HYGRO'VAP to HYGRO'VAP #3". The Certification Classes A to C according to the PHI are entered in addition.**

6.2 Membrane to OSB

Connection to	
Membrane on its own	
Membrane to membrane	
Membrane to OSB	x
Membrane to concrete	

Table 3: Test results of the three measurements with the membrane joined to the OSB using Adhésif Ubbink extérieur

examined area	1,48 m²

Pressure stages	Pa	50	100	150	200	250	300	350
Hygro vap to OSB #1								
total volume flow	m³/h	0,01	0,16	0,21	0,26	0,30	0,33	0,37
test stand leakage	m³/h	0,00	0,14	0,17	0,20	0,23	0,25	0,28
specific air volume flow	m³/h	0,01	0,03	0,04	0,05	0,07	0,08	0,10
leakage volume flow based on area	m³/(h m²)	0,01	0,02	0,03	0,04	0,05	0,06	0,07
Hygro vap to OSB #2								
total volume flow	m³/h	0,13	0,33	0,41	0,48	0,53	0,59	0,64
test stand leakage	m³/h	0,08	0,21	0,23	0,25	0,26	0,27	0,28
specific air volume flow	m³/h	0,07	0,12	0,17	0,22	0,27	0,32	0,37
leakage volume flow based on area	m³/(h m²)	0,04	0,08	0,12	0,15	0,18	0,22	0,25
Hygro vap to OSB #3								
total volume flow	m³/h	0,08	0,22	0,25	0,27	0,29	0,31	0,32
test stand leakage	m³/h	0,07	0,20	0,22	0,24	0,25	0,26	0,27
specific air volume flow	m³/h	0,01	0,02	0,03	0,03	0,04	0,04	0,05
leakage volume flow based on area	m³/(h m²)	0,01	0,01	0,02	0,02	0,02	0,03	0,03

Average

Q50 (PHI - assessment) **0,02** m³/(h m²)

resulting in an airtightness class of **A** according to PHI Q50 ≤ 0,1

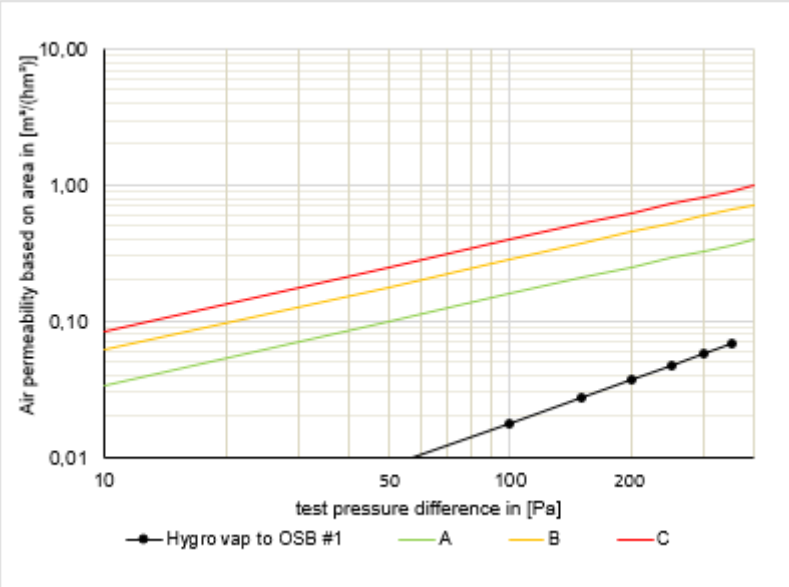

Fig. 9: **Series of measurements for the sample "HYGRO'VAP to OSB #1". The Certification Classes A to C according to the PHI are entered in addition.**

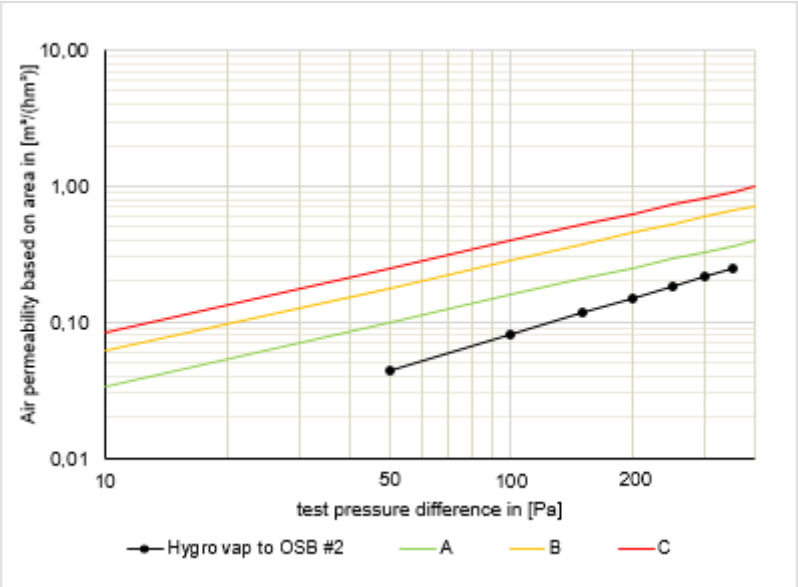

Fig. 10: **Series of measurements for the sample "HYGRO'VAP to OSB #2". The Certification Classes A to C according to the PHI are entered in addition.**

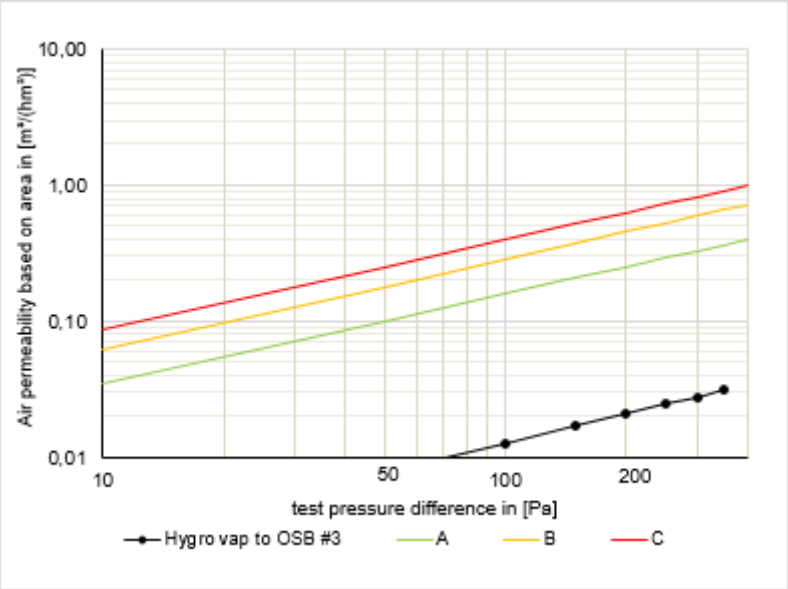

Fig. 11: **Series of measurements for the sample "HYGRO'VAP to OSB #3". The Certification Classes A to C according to the PHI are entered in addition.**

6.3 Membrane to concrete

Connection to	
Membrane on its own	
Membrane to membrane	
Membrane to OSB	
Membrane to concrete	x

Table 4: Test results of the three measurements with the membrane joined to concrete using Colle d'étanchéité pare-vapeur Ubbink

examined area	1,48	m²

Pressure stages	Pa	50	100	150	200	250	300	350
Hygro vap to concrete #1								
total volume flow	m³/h	0,08	0,22	0,25	0,27	0,29	0,30	0,32
test stand leakage	m³/h	0,08	0,21	0,23	0,25	0,27	0,28	0,29
specific air volume flow	m³/h	0,00	0,00	0,01	0,01	0,02	0,05	0,11
leakage volume flow based on area	m³/(h m²)	0,00	0,00	0,01	0,01	0,02	0,03	0,07
Hygro vap to concrete #2								
total volume flow	m³/h	0,05	0,19	0,22	0,24	0,26	0,28	0,29
test stand leakage	m³/h	0,33	0,55	0,64	0,71	0,77	0,82	0,87
specific air volume flow	m³/h	0,00	0,00	0,00	0,00	0,00	0,00	0,00
leakage volume flow based on area	m³/(h m²)	0,00	0,00	0,00	0,00	0,00	0,00	0,00
Hygro vap to concrete #3								
total volume flow	m³/h	0,05	0,20	0,23	0,25	0,27	0,29	0,31
test stand leakage	m³/h	0,13	0,30	0,35	0,39	0,43	0,46	0,49
specific air volume flow	m³/h	0,00	0,00	0,00	0,00	0,00	0,00	0,00
leakage volume flow based on area	m³/(h m²)	0,00	0,00	0,00	0,00	0,00	0,00	0,00

Average

Q50 (PHI - assessment) **0,00** m³/(h m²)

resulting in an airtightness class of **A** according to PHI Q50 ≤ 0,1

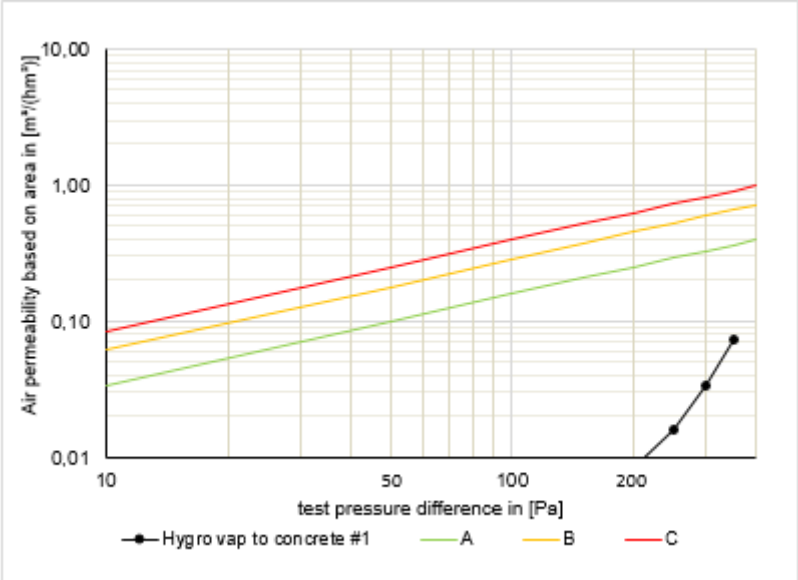

Fig. 12: **Series of measurements for the sample "HYGRO'VAP to concrete #1". The Certification Classes A to C according to the PHI are entered in addition.**

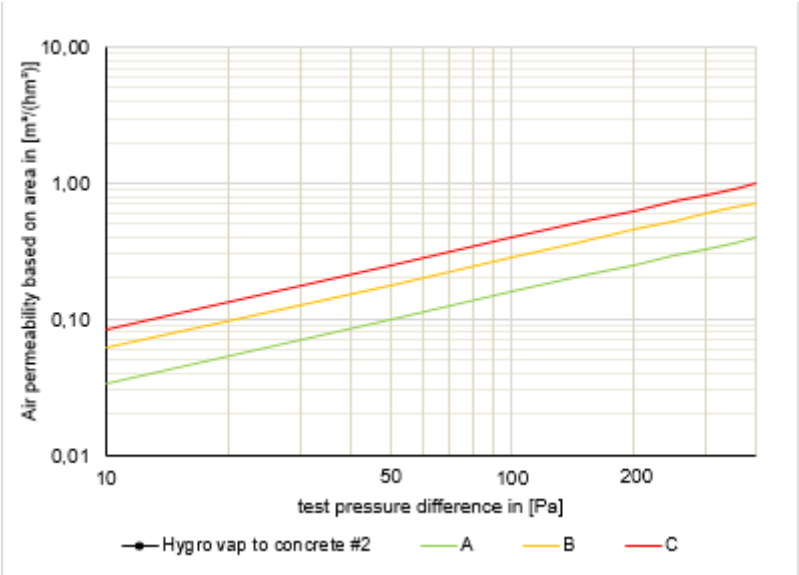

Fig. 13: **Series of measurements for the sample "HYGRO'VAP to concrete #2". The Certification Classes A to C according to the PHI are entered in addition.**

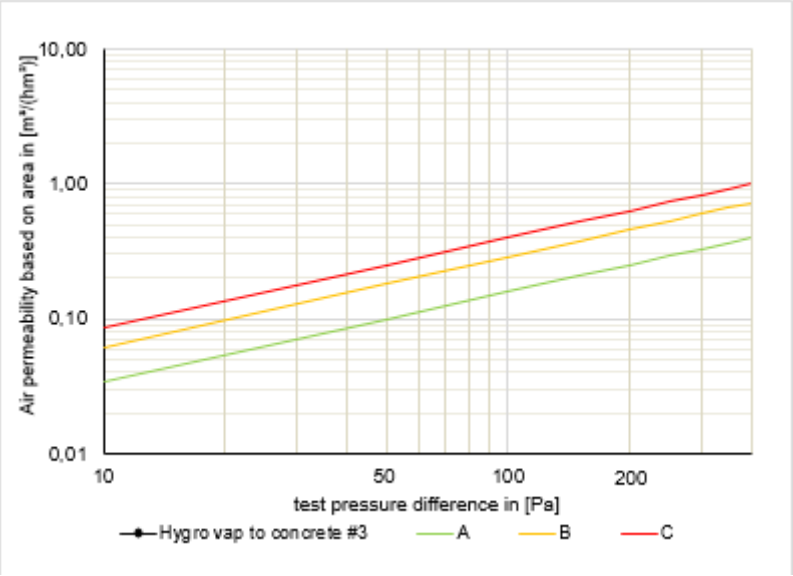

Fig. 14: **Series of measurements for the sample "HYGRO'VAP to concrete #3". The Certification Classes A to C according to the PHI are entered in addition.**

7. Test conditions

The average indoor climate conditions during the measurements and storage were as follows:

Indoor temperature: 18.24 °C
Indoor air humidity: 63 % r.H.

8. Measurement devices

A laminar flow element by the company TetraTec® Instruments was used for measuring the volume flow. The differential pressure was measured using an automated performance testing system (APT) by the manufacturer The Energy Conservatory.

Table 5: Overview of the used measurement devices

Name	Device type	Serial number	Measurement range	Measurement accuracy
LaminarMasterFlow-System	LMF	PH796	0-85 l/min	2% in the range of 8-80 l/min
TEC Automated Performance Testing	APT	0072 4	0-2000 Pa	1 %

9. Results

The results of these measurements were compiled and the overall average value was created according to the type of connection. In doing so, the measured value for the membrane on its own (without any joining) was not taken into account because this concerns certification as a system and not material testing only. On average, this resulted in an air permeability value of **0.03 (±0.004) m³/(hm²)** standardised for a test pressure of 50 Pa. The certification class "A" was achieved.

Table 6: Overview of the results of the airtightness measurement.

Average value of	m³/(hm²) @ 50 Pa
Membrane to membrane	0.06
Membrane to OSB	0.02
Membrane to concrete	0.00
Overall	**0.03 (±0.004)**

Table 7: Requirement class achieved by the examined product for certification as an "Airtightness system surface sealing" according to the specifications of the Passive House Institute

Class	Air permeability based on length @ 50 Pa [m³/(hm²)]	Class achieved
ph**A**	**≤ 0.10**	✓
ph**B**	≤ 0.18	
ph**C**	≤ 0.25	

Darmstadt, 12.11.2024

Wolfgang Hasper