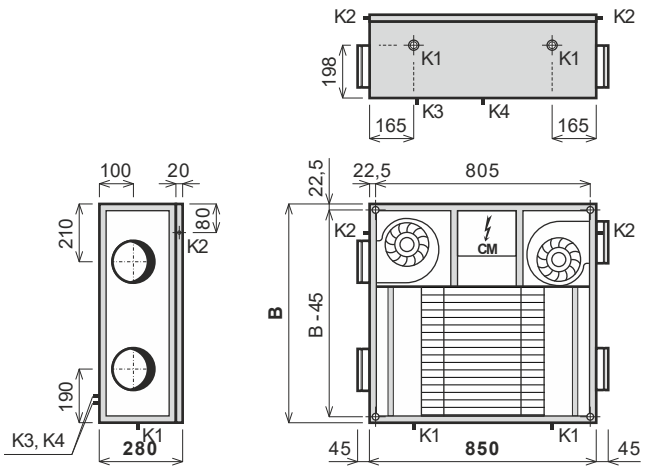
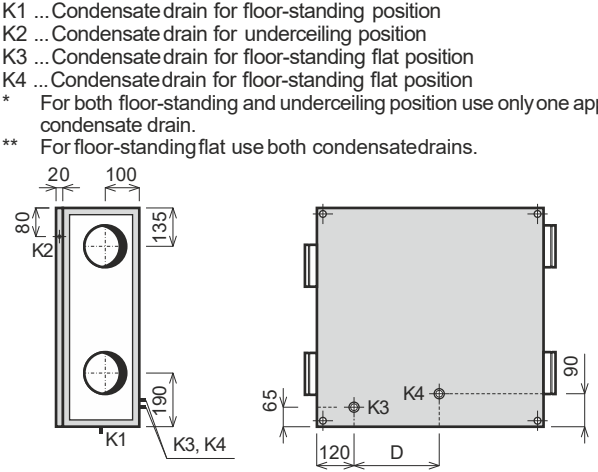
K1 ... Condensate drain for floor-standing position
K2 ... Condensate drain for underceiling position
K3 ... Condensate drain for floor-standing flat position
K4 ... Condensate drain for floor-standing flat position
* For both floor-standing and underceiling position use only one appropriate condensate drain.
** For floor-standing flat use both condensate drains.