INSTALLATION GUIDE

OBEX CORTEX FR

0500FR

Interface Sealing Membrane

Class B

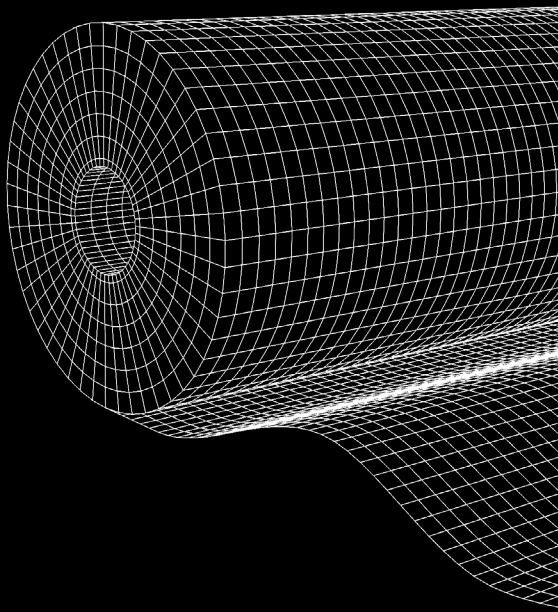

OBEX

1

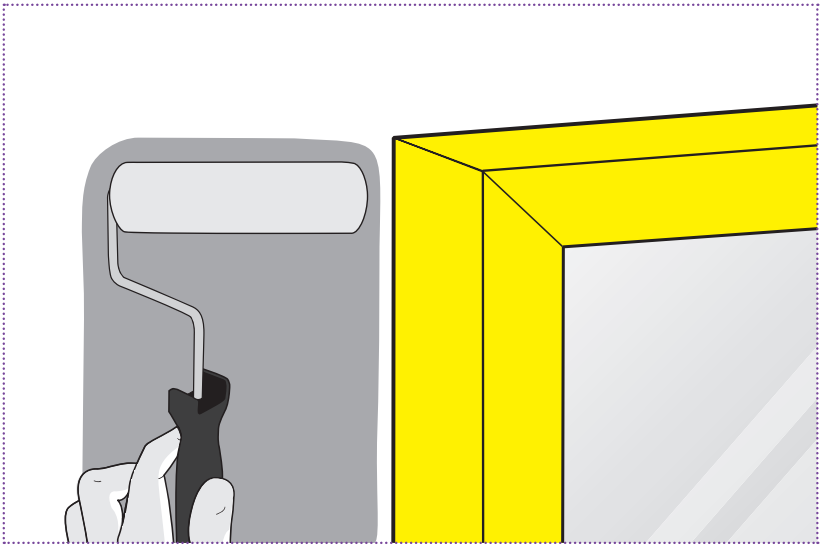

Ensure all substrates are clean, dry and free from grease and oil prior to application. All porous surfaces should be primed using OBEX CORTEX® 0787FR Non-Flammable Surface Primer.

1. Cill
2. Jambs
3. Head

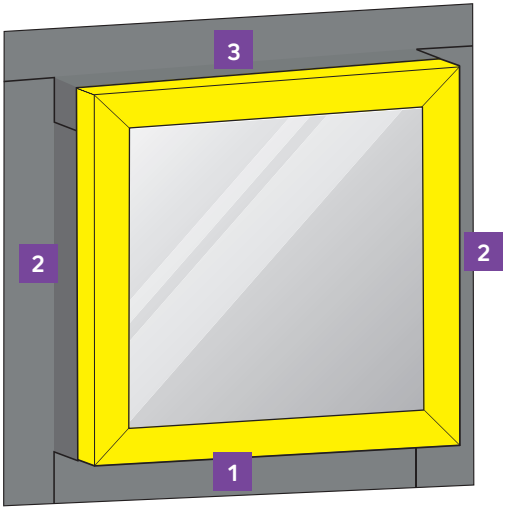

OBEX CORTEX® 0500FR Class B Interface Sealing Membrane should be fitted in this order around the window; cill, jambs and then the head.

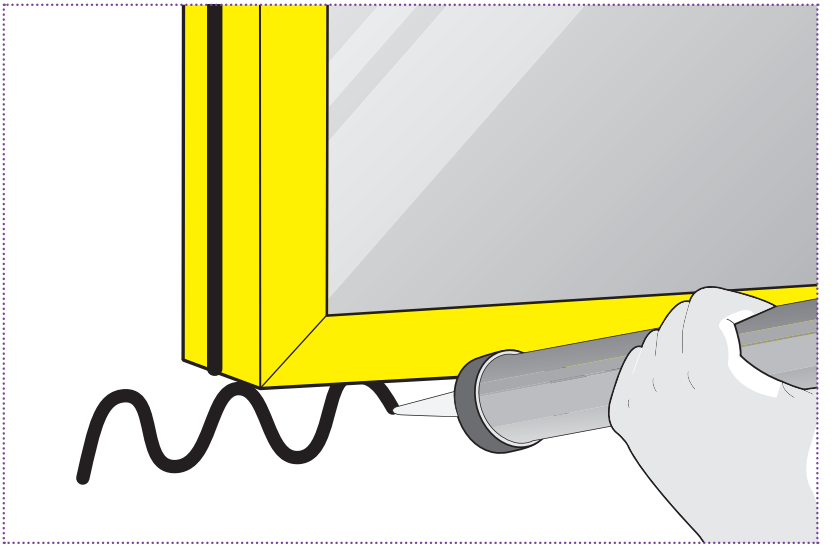

Apply OBEX CORTEX® 0771FR Class B Paste Adhesive to both the frame and the substrate using the OBEX CORTEX® 0813 Paste Adhesive Gun.

3

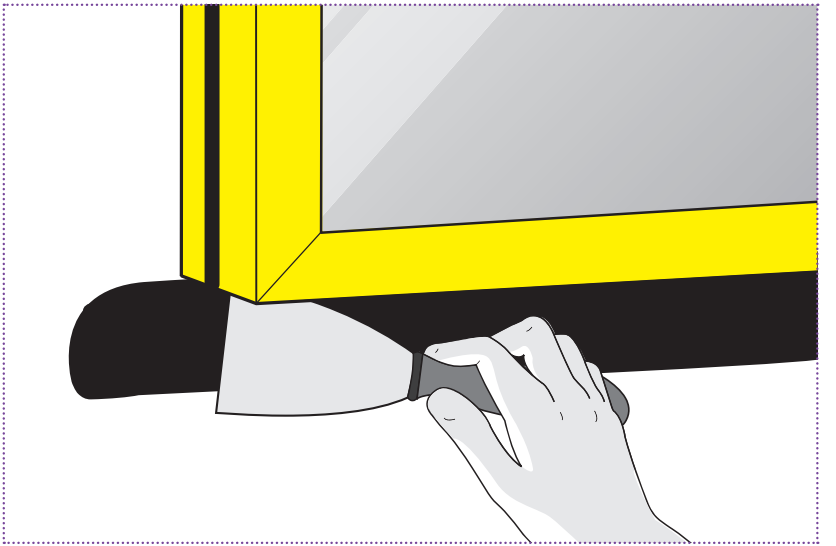

4

Spread out the paste adhesive evenly using a OBEX CORTEX® 0809 Paste Adhesive Spreader making sure you can achieve the correct bond width.

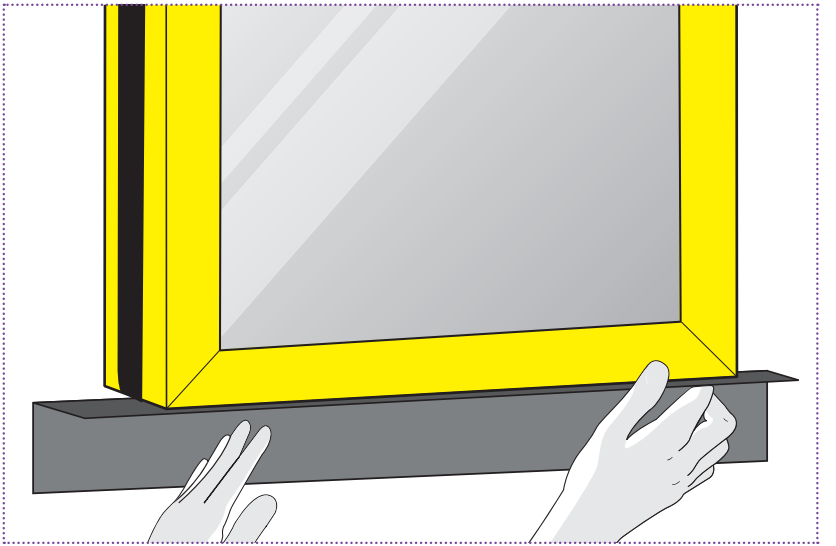

Bond the OBEX CORTEX® 0500FR Class B Interface Sealing Membrane to the frame first and then bond back to the substrate, ensuring the membrane is applied flat and without creases. It is important to ensure the cill membrane is fitted first.

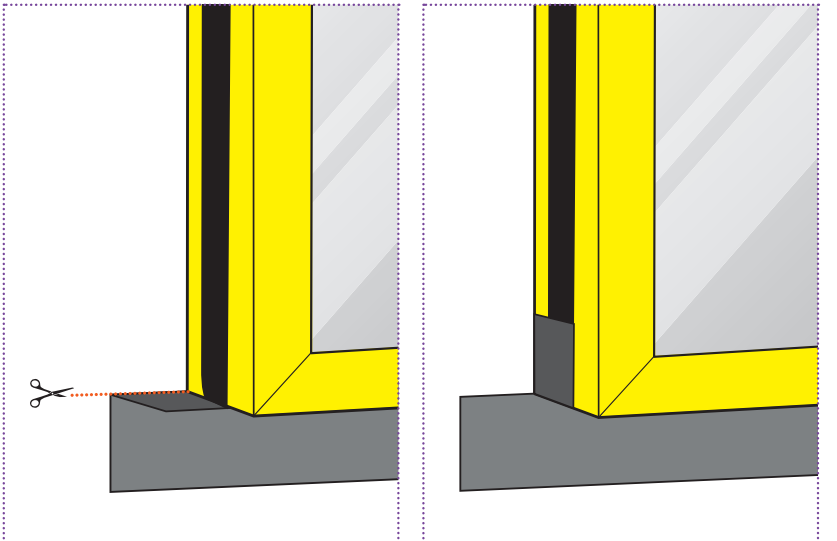

Create an incision along the red dotted line. Now bond the OBEX CORTEX® 0500FR Class B Interface Sealing Membrane flap to the sides of the frame, ensuring the membrane is applied flat and without creases.

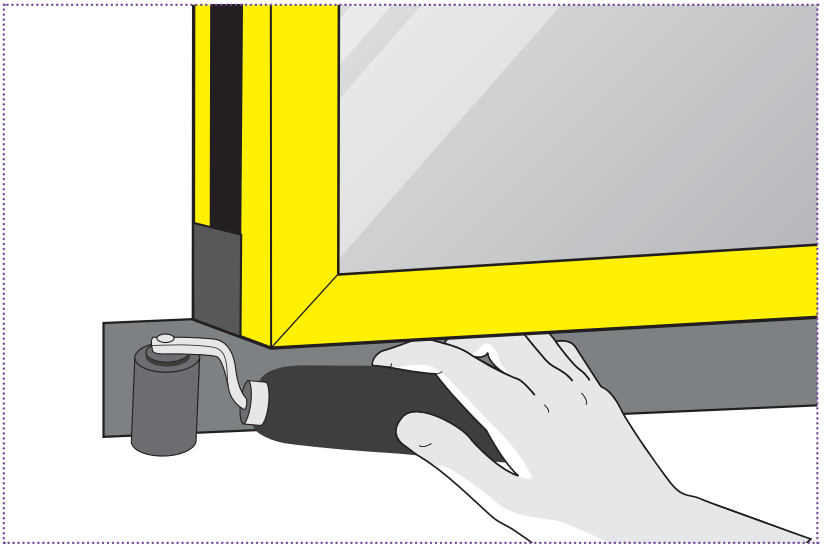

Roll firmly with a OBEX CORTEX 0803 seam roller to ensure maximum bond strength on both the frame and the substrate.

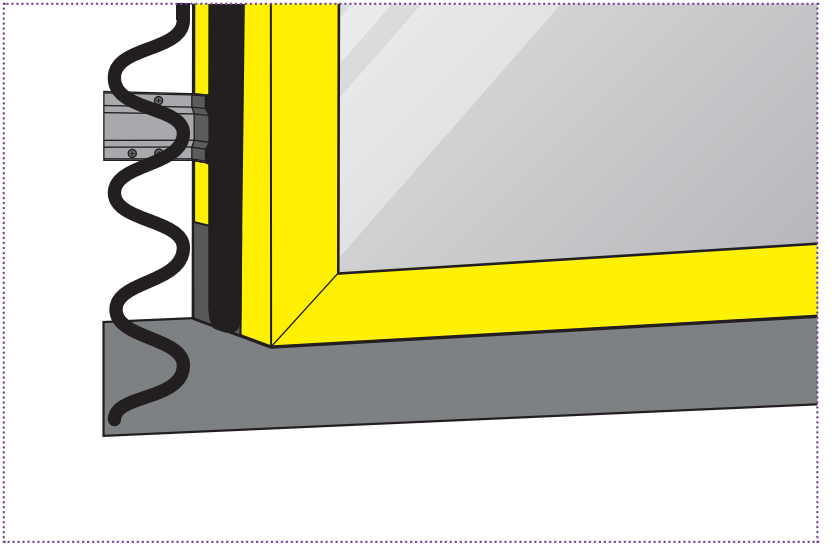

Apply OBEX CORTEX® 0771FR Class B Paste Adhesive to the substrates either side of the window using the OBEX CORTEX® 0813 Paste Adhesive Gun.

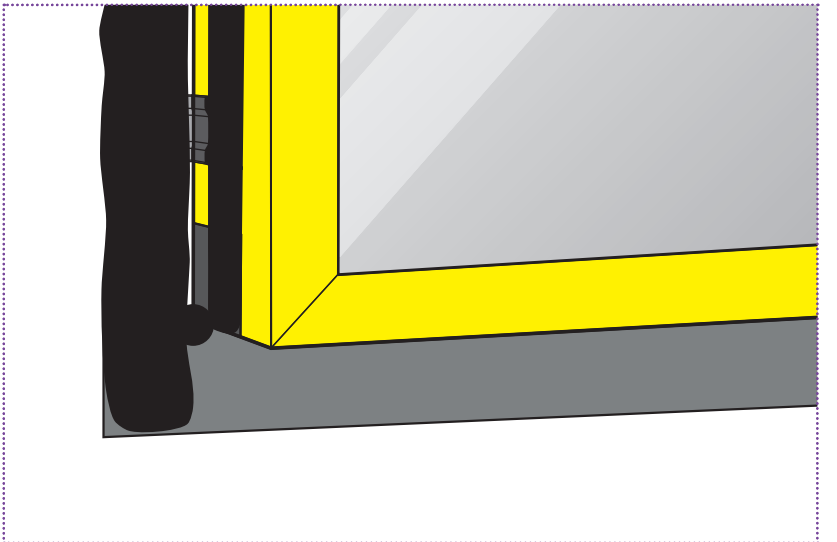

Spread out the paste adhesive evenly using a OBEX CORTEX® 0809 Paste Adhesive Spreader making sure you can achieve the correct bond width.

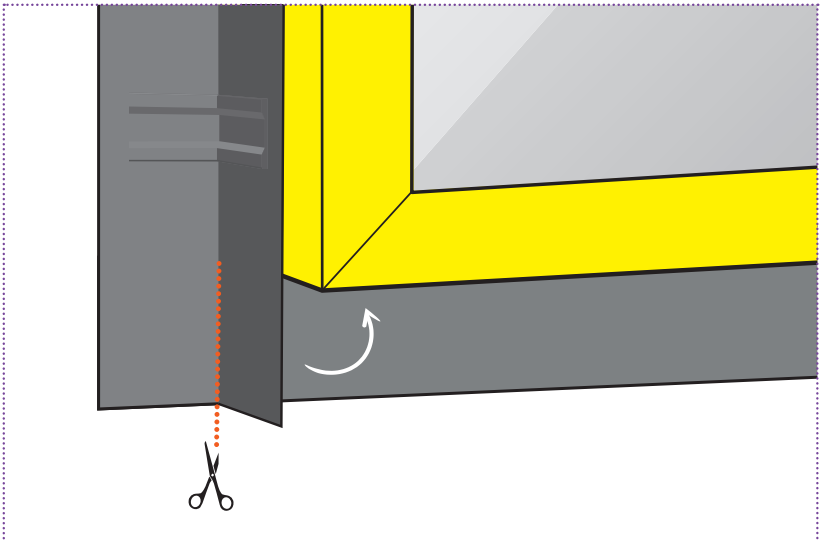

Now apply your second piece of membrane following steps 3-5. Once applied, cut along the red dotted line and fold the flap up to meet the frame. Roll membrane firmly with a OBEX CORTEX 0803 seam roller to ensure maximum bond strength.

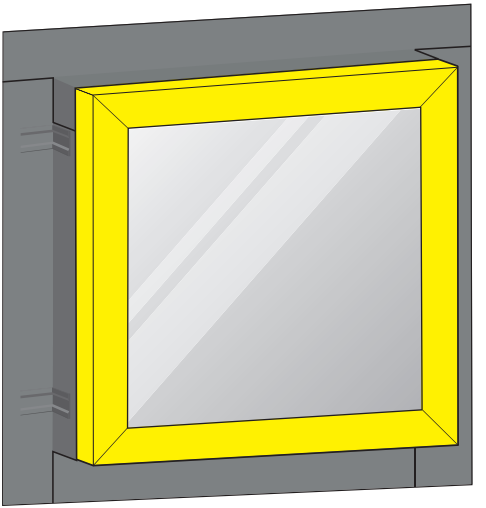

Once all the membrane is bonded, the fold and lap created corners should appear like the above. Apply a further bead of OBEX CORTEX® 0771FR Class B Paste Adhesive around the perimeter of the membrane and any joints/laps.

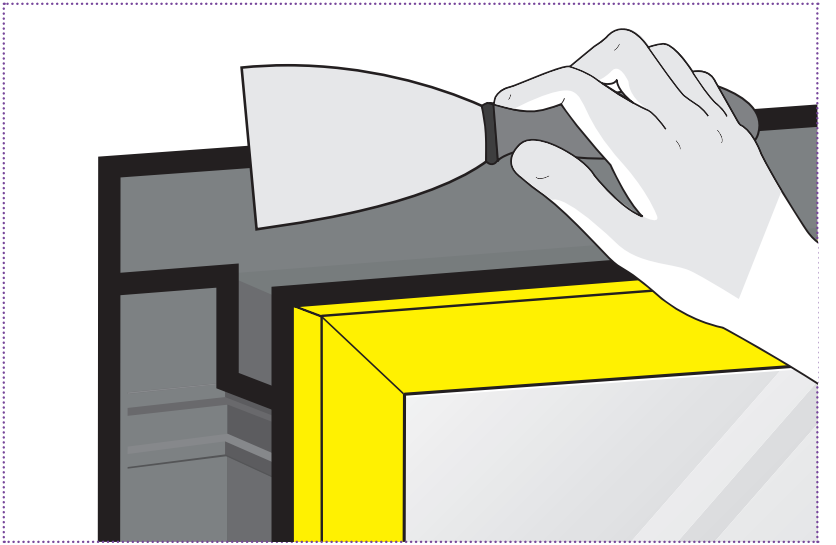

Tool off the paste adhesive with a OBEX CORTEX® 0809 Paste Adhesive Spreader to ensure there are no open edges.

Disclaimer

The installation guidelines provided in this document are intended for general informational purposes only and do not constitute specific design or installation details for OBEX CORTEX Membranes. They should be used as a guide and do not replace professional judgement or specific installation requirements.

Installation, and any consequences thereof, remain the sole responsibility of the installer. Installers should apply their own professional judgement to adapt these guidelines to the specific circumstances of each project. Furthermore, installers should always comply with local, state, and national codes, as well as any relevant industry standards and best practices.

OBEX does not accept responsibility or liability for any damages, losses, or other consequences that may arise as a result of the use, misuse, or misinterpretation of these guidelines. This includes, but is not limited to, failures, defects, or any other issues related to the installation of OBEX CORTEX Membranes.

By proceeding with the installation, the installer acknowledges and accepts these terms and conditions.

Important Points to Remember

- Before application, prime all porous substrates with OBEX CORTEX® 0787FR Non-Flammable Surface Primer.
- Minimum bond width on all porous substrates is 100mm including all sheathing boards
- For non-porous substrates, the recommended bond width is 50mm, with a minimum width of 20-30mm.
- Ensure the paste is spread out evenly and firmly roll the membrane into the paste to ensure proper bonding.
- Make sure to adequately cap off all edges of the membrane with paste, leaving no exposed edges.
- Paste adhesive should be left to cure for a minimum of 1 week before any air pressurisation testing is carried out.

OBEX Protection Ltd. Unit 12 Horn Hill Road, Nunnery Park, Nunnery Way, Worcester, WR4 0SX.
Call: +44 (0) 1905 337800 | **Email:** sales@obexuk.com | **Visit:** www.obexuk.com
© Copyright 2022 OBEX. All rights reserved. Company Registration No. 09157067, VAT No: 868 7649 48