Report - Certified Passive House Component I Bericht - Zertifizierte Passivhaus Komponente

Passive House Institute

Window frame
Fensterrahmen

Passive House Institute
Rheinstraße 44/46
64283 Darmstadt
GERMANY

+49.6151.82699.0

mail@passiv.de
www.passiv.de

Product I Produkt:	**Winframer**
Client I Auftraggeber:	**ISO-Chemie**
Spacer I Abstandhalter:	**SuperSpacer Tri-Seal**
Date I Datum:	**15.10.2015**
Author I Autor:	**Dr.-Ing. Benjamin Krick**

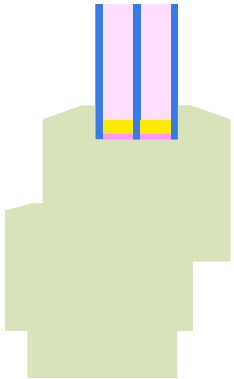

frame values | Rahmenwerte																	
ISO-Chemie		Bottom	Top	Side	Bottom fixed	Top fixed	Side fixed	Bottom barrier-free	Side door	Flying mullion	Mullion	Mullion	Mullion fixed	Corner	Transom	Transom	Transom fixed
Winframer		Unten	Oben	Seitl.	Unten fest	Oben fest	Seitl. fest	Unten barri-erefrei	Seite Tür	Stulp	Pfosten	Pfosten	Pfosten fest	Ecke	Kämpfer	Kämpfer	Kämpfer fest
Spacer I Abstandhalter: SuperSpacer Tri-Seal														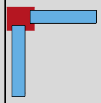			
Temperaturefactor Temperaturfaktor	$f_{Rsi=0,25m^2k/W}$	0,73	0,72	0,72								0,75					
Frame width Rahmenbreite	b_f [mm]	0,145	0,12	0,12								0,214					
U-value frame Rahmen-U-Wert	**Uf** [W/(m²K)]	0,79	0,76	0,76								0,79					
Ψ-glass edge Glasrand-Ψ-Wert	**Ψg** [W/(mK)]	0,025	0,025	0,025								0,034					
U-value window Fenster-U-Wert	**Uw** [W/(m²K)] @U_g = 0,70 W/(m²K)	**0,784**															
Ψ_{opaque} Ψ_{opak}	Ψ_{opaque} W/(mK)	**0,133**															
Passive House effiziency class Passivhaus Effizienzklasse		**phB**															

Installation | Einbau									
EIFS | WDVS U-Wall = 0,13 W/(m²K)									
$\Psi_{install}$ [W/(mK)]	0,032	0,009	0,009						
$U_{w, installed}$ [W/(m²K)]	0,83								
Lightwight timber construction | Holzleichtbau U-Wall = 0,13 W/(m²K)									
$\Psi_{install}$ [W/(mK)]									
$U_{w, installed}$ [W/(m²K)]									
Formwork blocks | Betonschalungsstein U-Wall = 0,15 W/(m²K)									
$\Psi_{install}$ [W/(mK)]	0,023	0,005	0,005						
$U_{w, installed}$ [W/(m²K)]	0,81								
Ventillated facade | Vorhangfassade U-Wall = 0,13 W/(m²K)									
$\Psi_{install}$ [W/(mK)]									
$U_{w, installed}$ [W/(m²K)]									
Cavity wall | Zweischaliges Mauerwerk U-Wall = 0,13 W/(m²K)									
$\Psi_{install}$ [W/(mK)]	0,018	0,002	0,002						
$U_{w, installed}$ [W/(m²K)]	0,80								

Contact person \| Ansprechpartner

ISO-Chemie, Andreas Lange
+49 7361 - 94 90 68 +49 7361 - 94 90 90

Construction:
PHI Standard-frame thermal conductivity of representative material: 0,086 W/(mK)

Konstruktion:
PHI Standardrahmen Wärmeleifähigkeit Ersatzmaterial 0,086 W/(mK)

Calculation I Berechnung

Passivhaus Institut Darmstadt

15.10.2015

Material	λ[W/(m·K)]
Ar16 in 44 mm U 0,7	0.026
Frame / Standardrahmen	0.086
Glass / Glas	1.000
Polysulfide / Polysulfid	0.400
SuperSpacer Tri-Seal_Box2	0.150

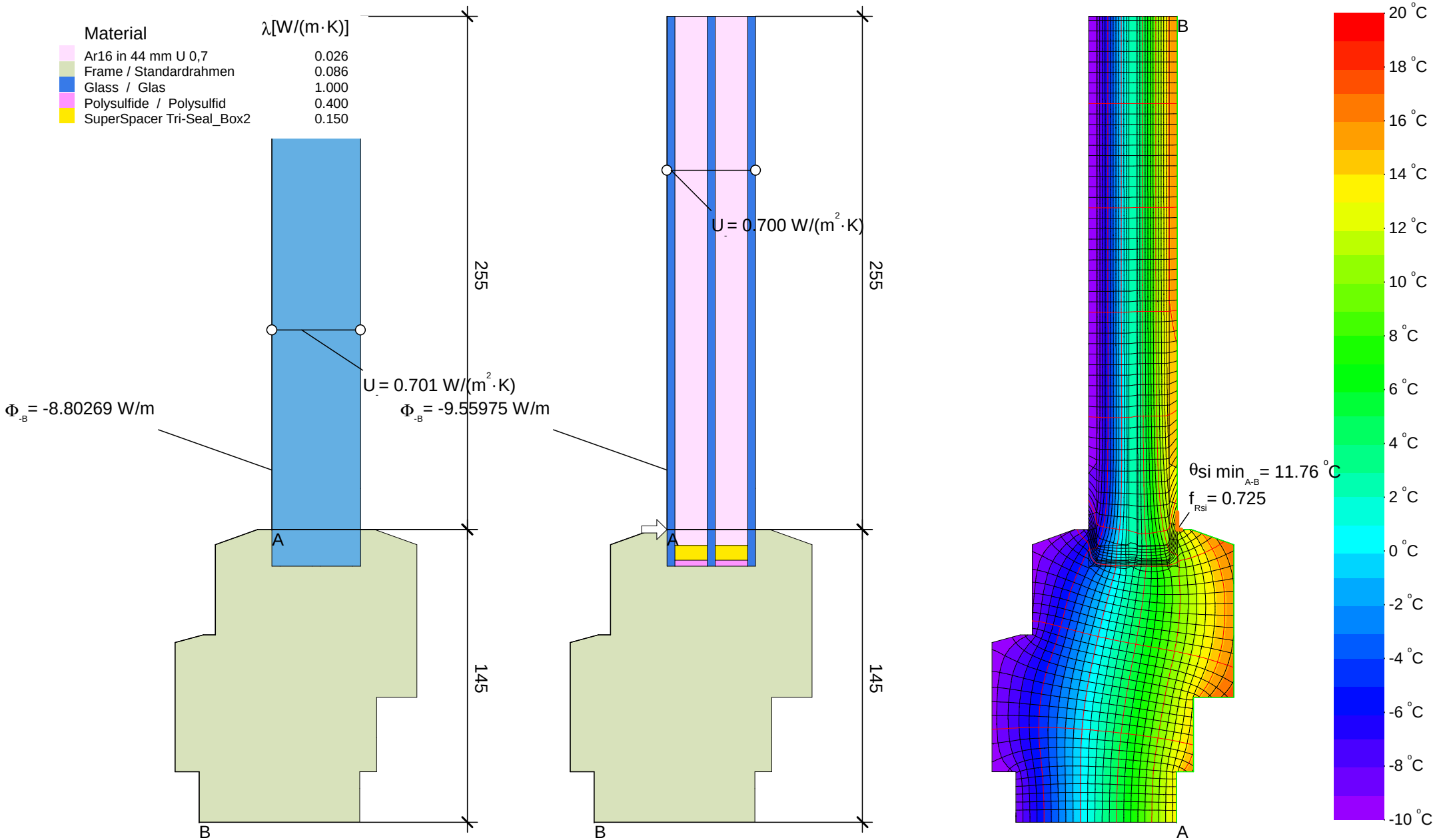

$$U_{f\,A,B} = \frac{\frac{\Phi}{\Delta T} - U_p \cdot b_p}{b_f} = \frac{\frac{8.803}{30.000} - 0.701 \cdot 0.255}{0.145} = 0.791\ W/(m^2 \cdot K)$$

$$\psi_A = \frac{\Phi}{\Delta T} - U_g \cdot b_g - U_f \cdot b_f = \frac{9.560}{30.000} - 0.700 \cdot 0.255 - 0.791 \cdot 0.145 = 0.025\ W/(m \cdot K)$$

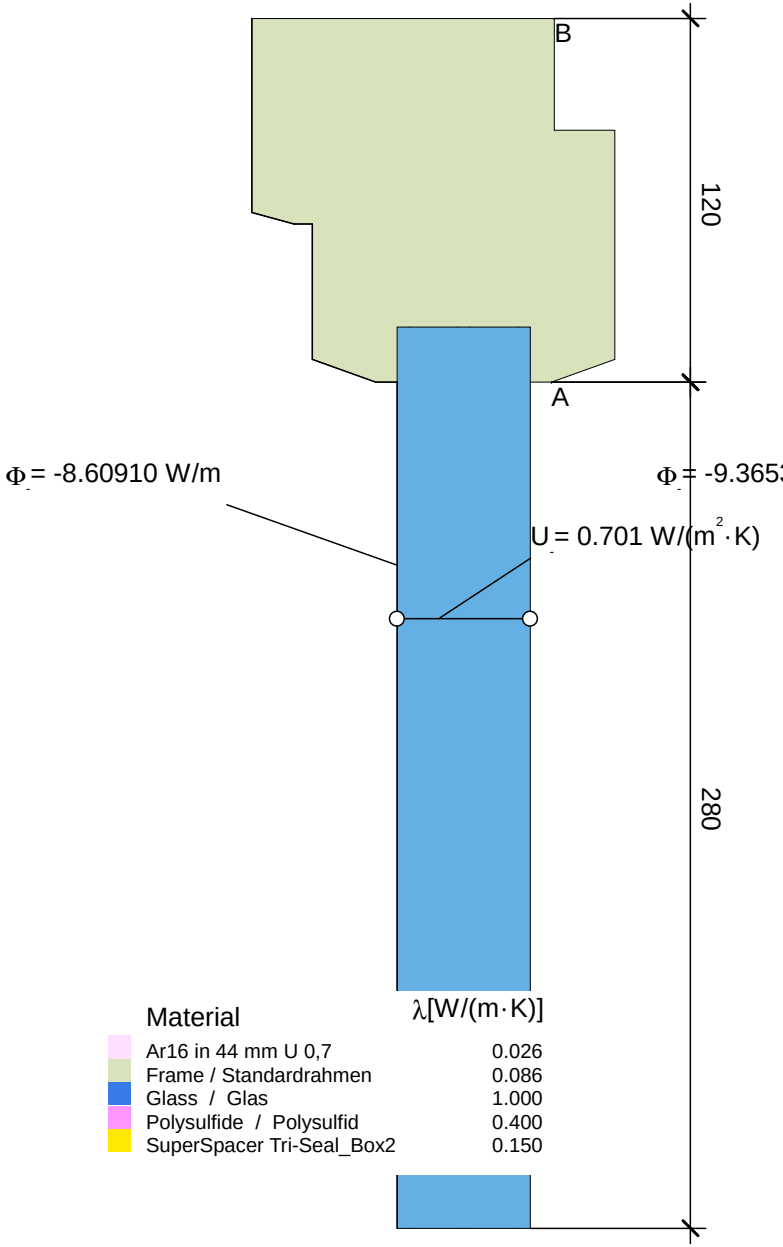

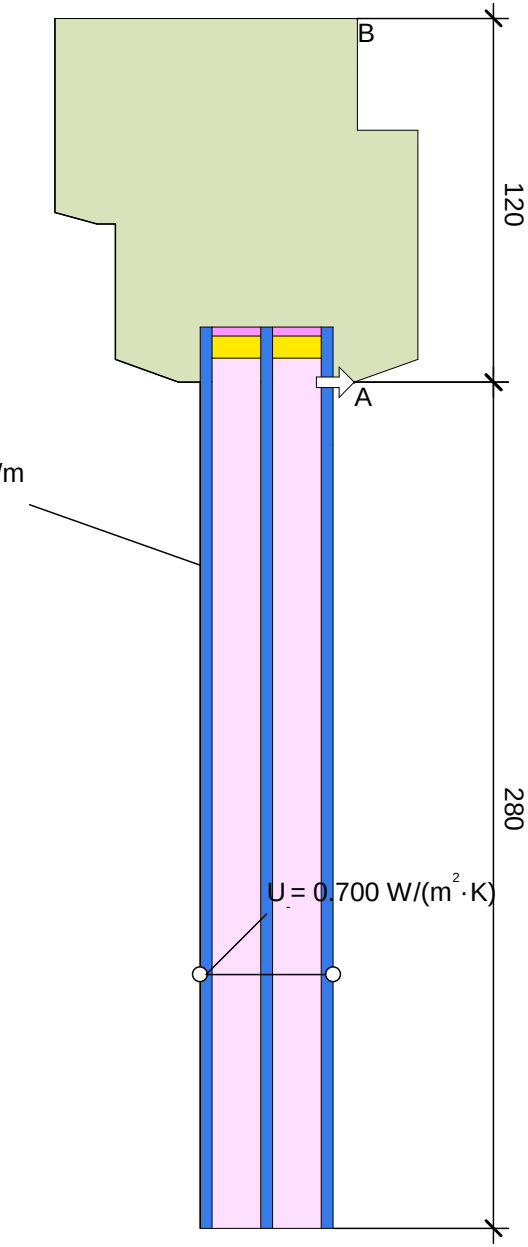

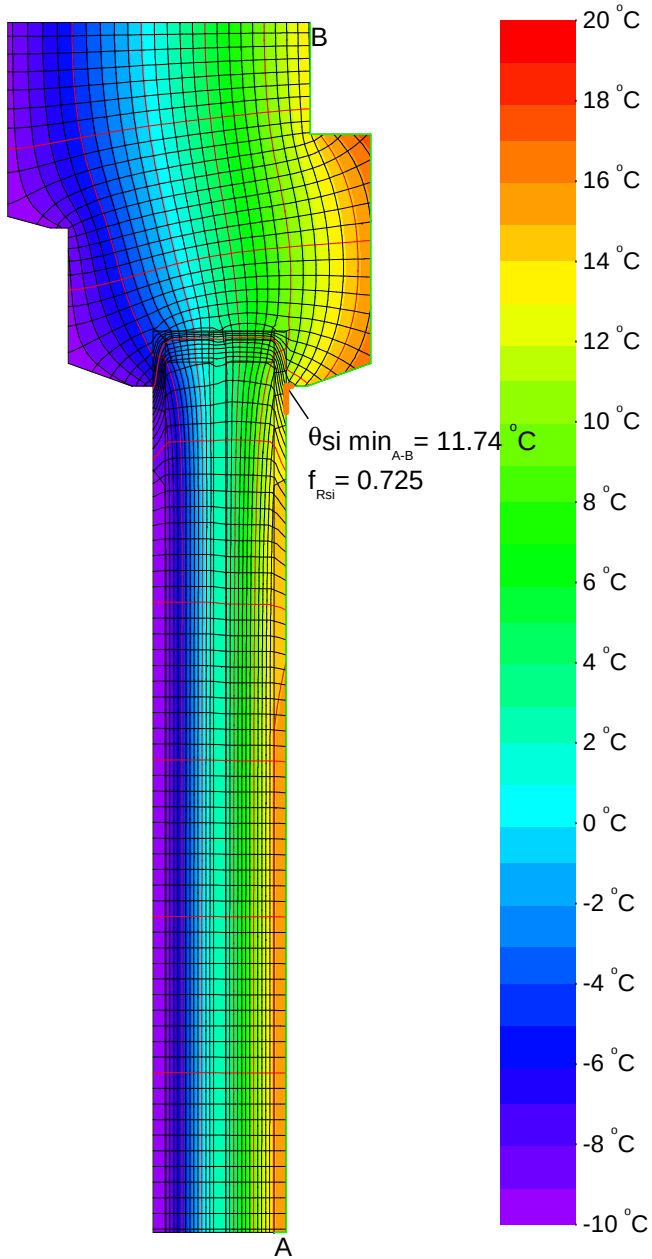

$$U_{f\,A,B} = \frac{\frac{\Phi}{\Delta T} - U_p \cdot b_p}{b_f} = \frac{\frac{8.609}{30.000} - 0.701 \cdot 0.280}{0.120} = 0.756\ W/(m^2 \cdot K)$$

$$\psi_A = \frac{\Phi}{\Delta T} - U_g \cdot b_g - U_f \cdot b_f = \frac{9.365}{30.000} - 0.700 \cdot 0.280 - 0.756 \cdot 0.120 = 0.025\ W/(m \cdot K)$$

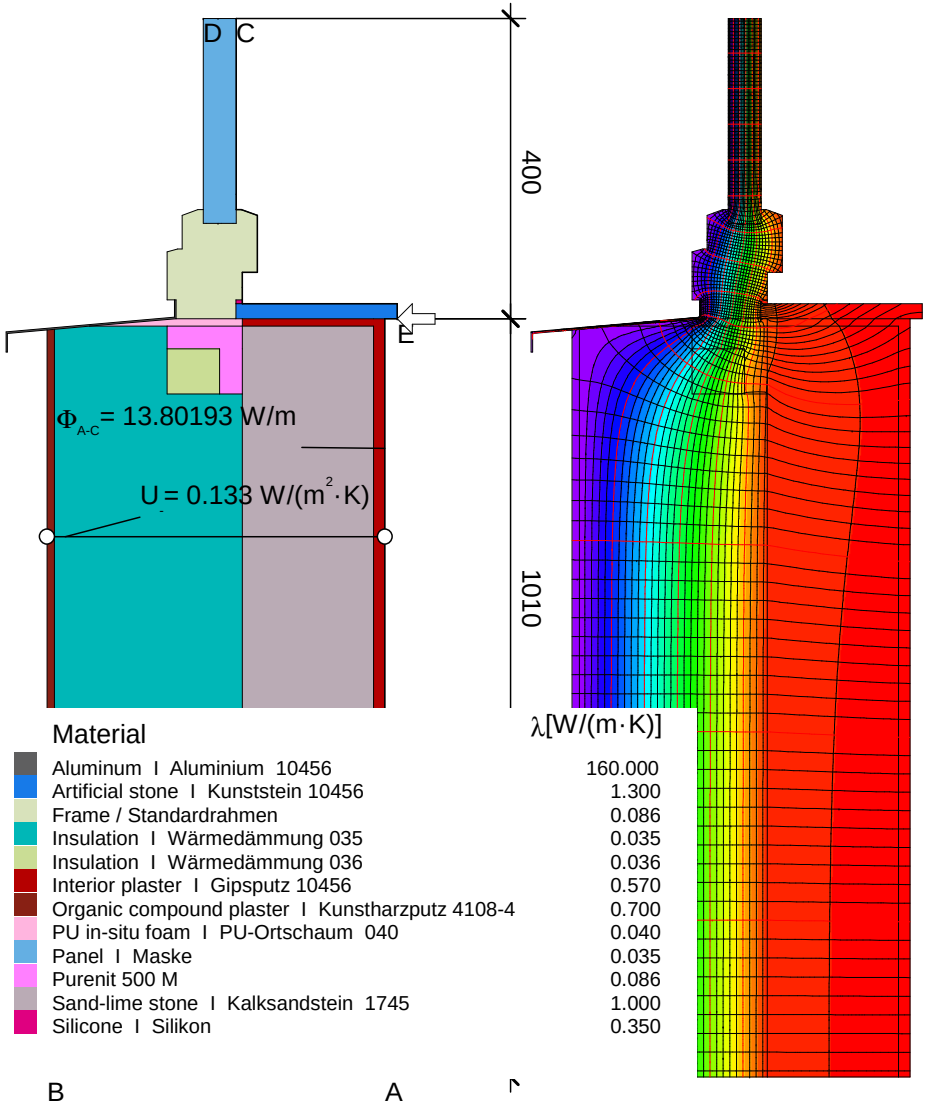

Material	λ[W/(m·K)]
Aluminum I Aluminium 10456	160.000
Artificial stone I Kunststein 10456	1.300
Frame / Standardrahmen	0.086
Insulation I Wärmedämmung 035	0.035
Insulation I Wärmedämmung 036	0.036
Interior plaster I Gipsputz 10456	0.570
Organic compound plaster I Kunstharzputz 4108-4	0.700
PU in-situ foam I PU-Ortschaum 040	0.040
Panel I Maske	0.035
Purenit 500 M	0.086
Sand-lime stone I Kalksandstein 1745	1.000
Silicone I Silikon	0.350

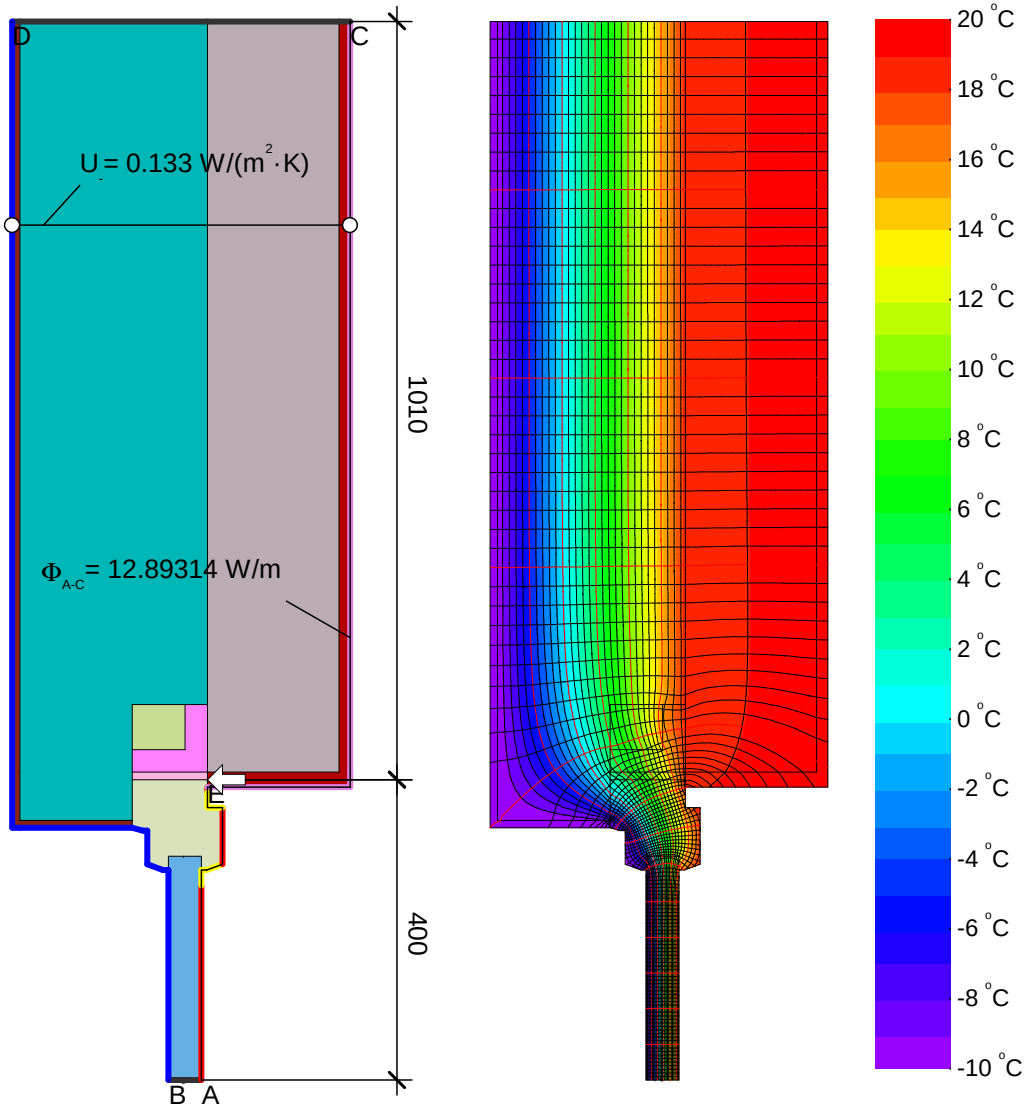

$$\psi_{A\text{-}E\text{-}C,*} = \frac{\Phi}{\Delta T} - U_1 \cdot b_1 - \frac{\Phi_2}{\Delta T} = \frac{13.802}{30.000} - 0.133 \cdot 1.010 - \frac{8.803}{30.000} = 0.032 \text{ W/(m·K)}$$

$$\psi_{A\text{-}E\text{-}C,*} = \frac{\Phi}{\Delta T} - \frac{\Phi_1}{\Delta T} - U_2 \cdot b_2 = \frac{12.893}{30.000} - \frac{8.609}{30.000} - 0.133 \cdot 1.010 = 0.009 \text{ W/(m·K)}$$

Randbedingung	q[W/m²]	θ[°C]	R[(m²·K)/W]
Adiabatic	0.000		
Exterior I Außen		-10.000	0.040
Interior I Innen		20.000	0.130
Interior, frame, normal		20.000	0.130
Interior, frame, reduced		20.000	0.200

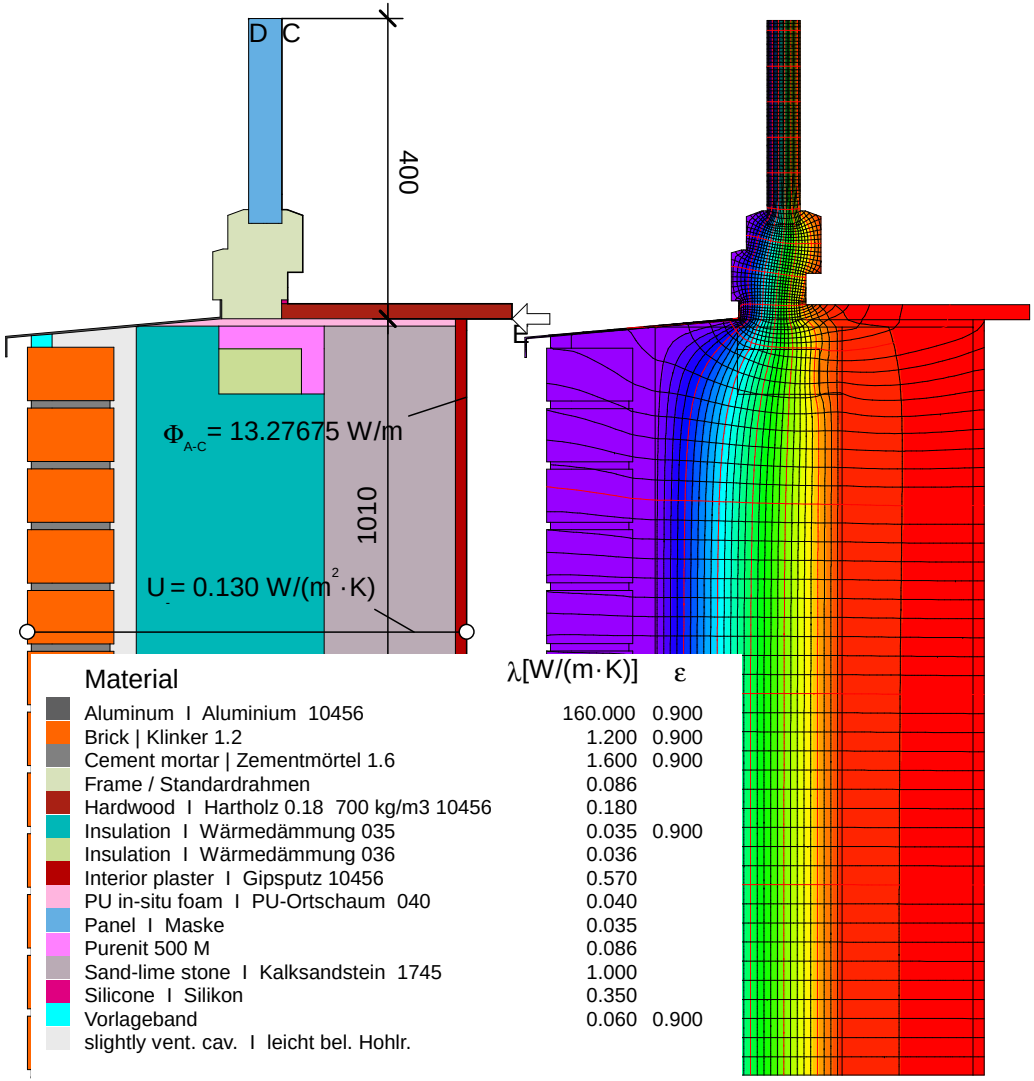

Material	λ[W/(m·K)]	ε
Aluminum I Aluminium 10456	160.000	0.900
Brick | Klinker 1.2	1.200	0.900
Cement mortar | Zementmörtel 1.6	1.600	0.900
Frame / Standardrahmen	0.086	
Hardwood I Hartholz 0.18 700 kg/m3 10456	0.180	
Insulation I Wärmedämmung 035	0.035	0.900
Insulation I Wärmedämmung 036	0.036	
Interior plaster I Gipsputz 10456	0.570	
PU in-situ foam I PU-Ortschaum 040	0.040	
Panel I Maske	0.035	
Purenit 500 M	0.086	
Sand-lime stone I Kalksandstein 1745	1.000	
Silicone I Silikon	0.350	
Vorlageband	0.060	0.900
slightly vent. cav. I leicht bel. Hohlr.		

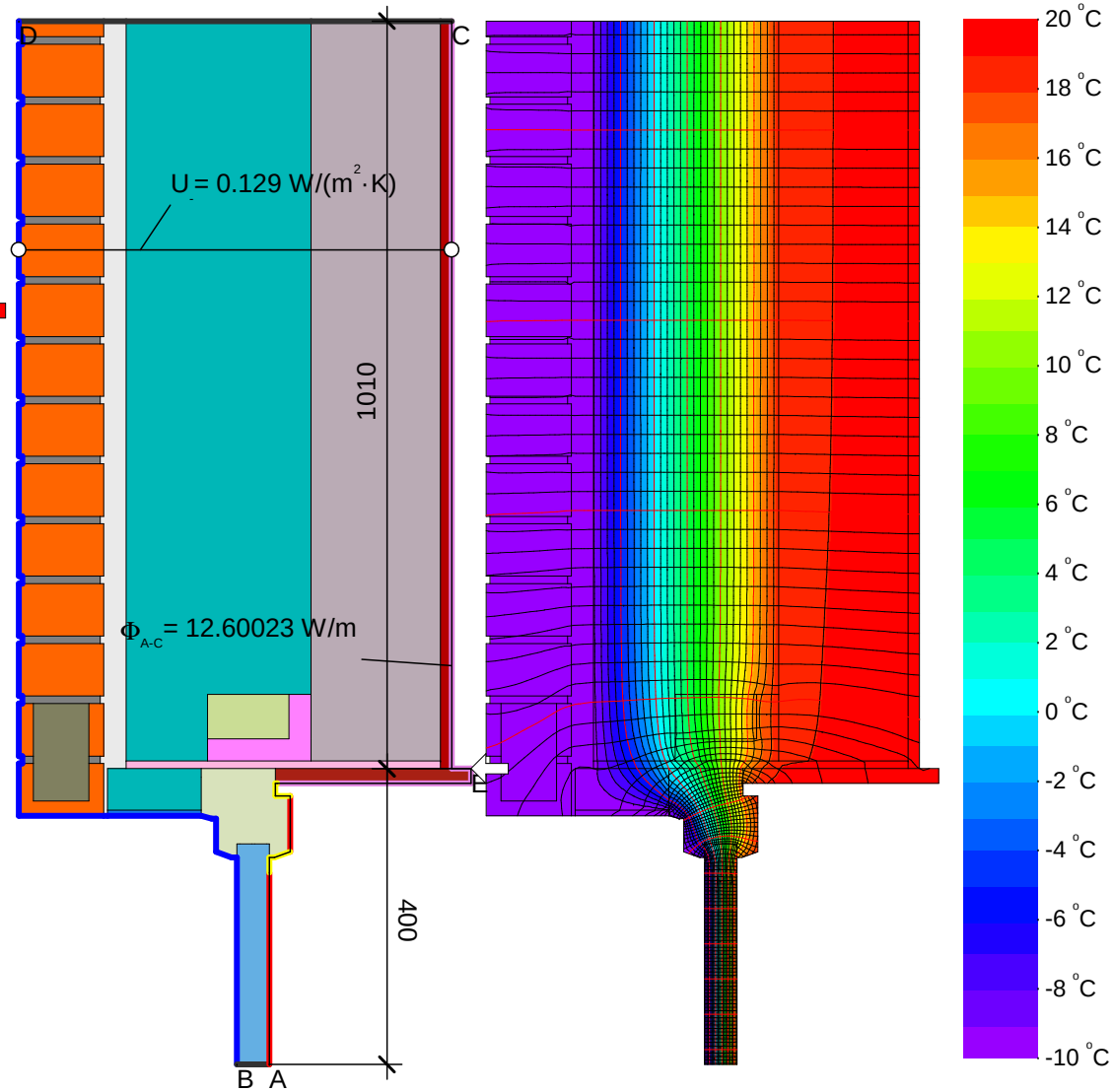

$$\psi_{A-E-C,*} = \frac{\Phi}{\Delta T} - U_1 \cdot b_1 - \frac{\Phi_2}{\Delta T} = \frac{13.277}{30.000} - 0.130 \cdot 1.010 - \frac{8.803}{30.000} = 0.018 \text{ W/(m·K)}$$

$$\psi_{A-E-C,*} = \frac{\Phi}{\Delta T} - \frac{\Phi_1}{\Delta T} - U_2 \cdot b_2 = \frac{12.600}{30.000} - \frac{8.609}{30.000} - 0.129 \cdot 1.010 = 0.002 \text{ W/(m·K)}$$

Randbedingung	q[W/m²]	θ[°C]	R[(m²·K)/W]	ε
Adiabatic	0.000			
Exterior I Außen		-10.000	0.040	
Interior I Innen		20.000	0.130	
Interior, frame, normal		20.000	0.130	
Interior, frame, reduced		20.000	0.200	
e 0,9 Cavity I Hohlraum				0.900

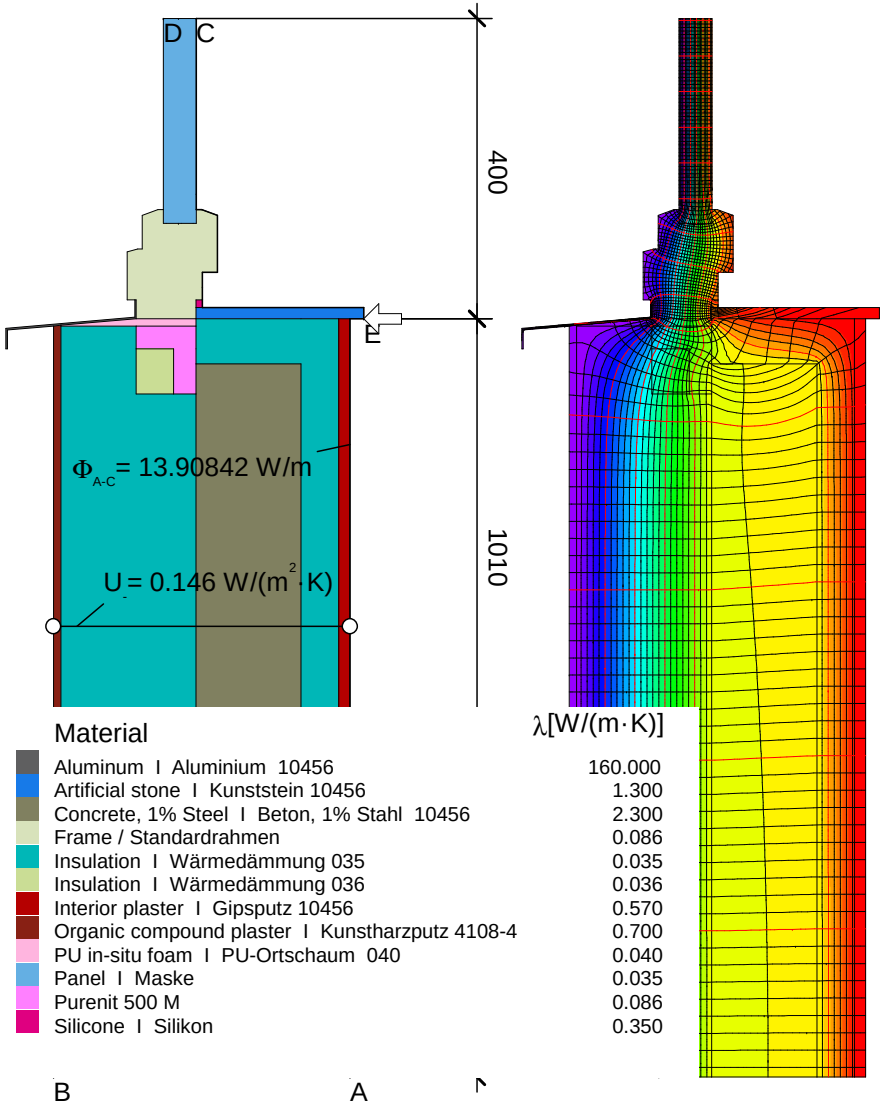

Material	λ[W/(m·K)]
Aluminum I Aluminium 10456	160.000
Artificial stone I Kunststein 10456	1.300
Concrete, 1% Steel I Beton, 1% Stahl 10456	2.300
Frame / Standardrahmen	0.086
Insulation I Wärmedämmung 035	0.035
Insulation I Wärmedämmung 036	0.036
Interior plaster I Gipsputz 10456	0.570
Organic compound plaster I Kunstharzputz 4108-4	0.700
PU in-situ foam I PU-Ortschaum 040	0.040
Panel I Maske	0.035
Purenit 500 M	0.086
Silicone I Silikon	0.350

$$\psi_{A\text{-}E\text{-}C,*} = \frac{\Phi}{\Delta T} - U_1 \cdot b_1 - \frac{\Phi_2}{\Delta T} = \frac{13.908}{30.000} - 0.146 \cdot 1.010 - \frac{8.803}{30.000} = 0.023 \text{ W/(m·K)}$$

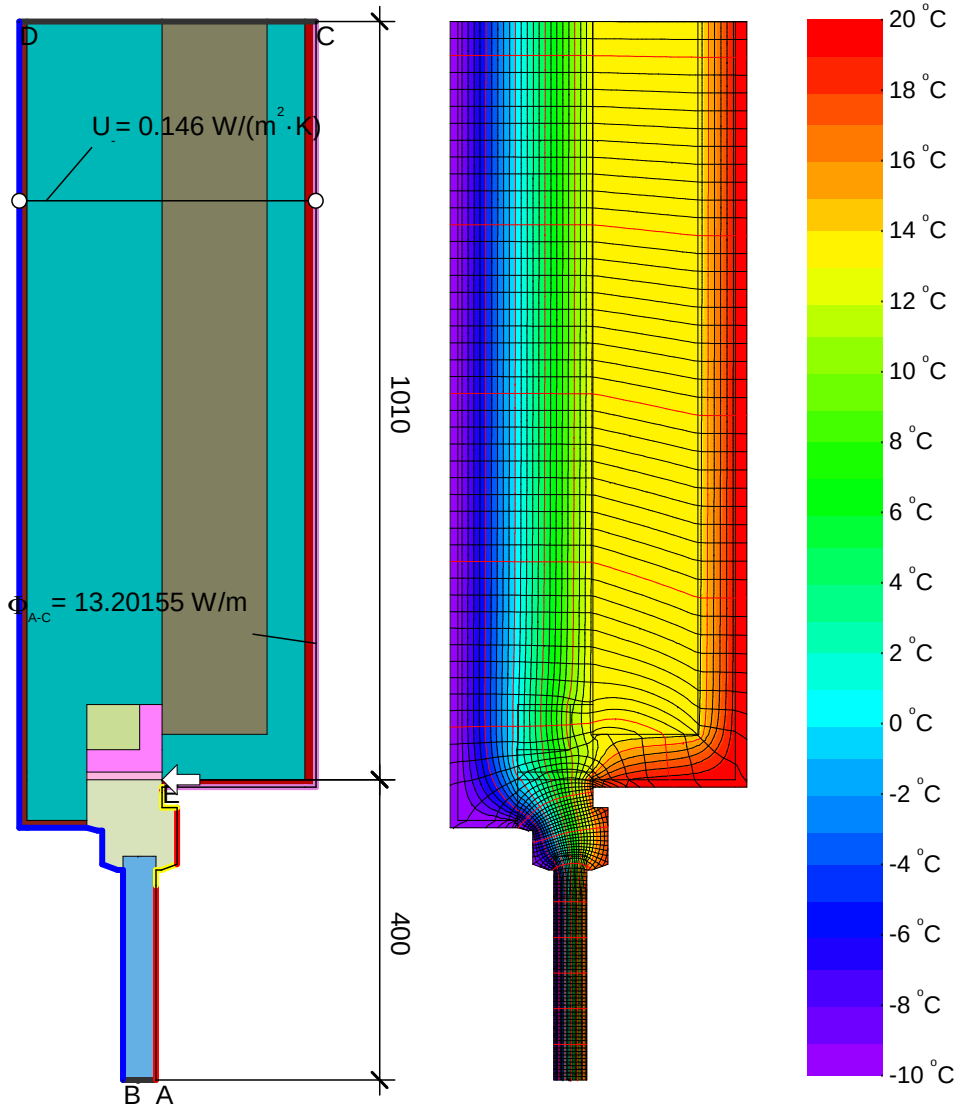

$$\psi_{A\text{-}E\text{-}C,*} = \frac{\Phi}{\Delta T} - \frac{\Phi_1}{\Delta T} - U_2 \cdot b_2 = \frac{13.202}{30.000} - \frac{8.609}{30.000} - 0.146 \cdot 1.010 = 0.005 \text{ W/(m·K)}$$

Randbedingung	q[W/m²]	θ[°C]	R[(m²·K)/W]
Adiabatic	0.000		
Exterior I Außen		-10.000	0.040
Interior I Innen		20.000	0.130
Interior, frame, normal		20.000	0.130
Interior, frame, reduced		20.000	0.200