# CERTIFICATE

**Certified Passive House Component**

Component-ID 2308cw03 valid until 31st December 2025

Passive House Institute
Dr. Wolfgang Feist
64283 Darmstadt
Germany

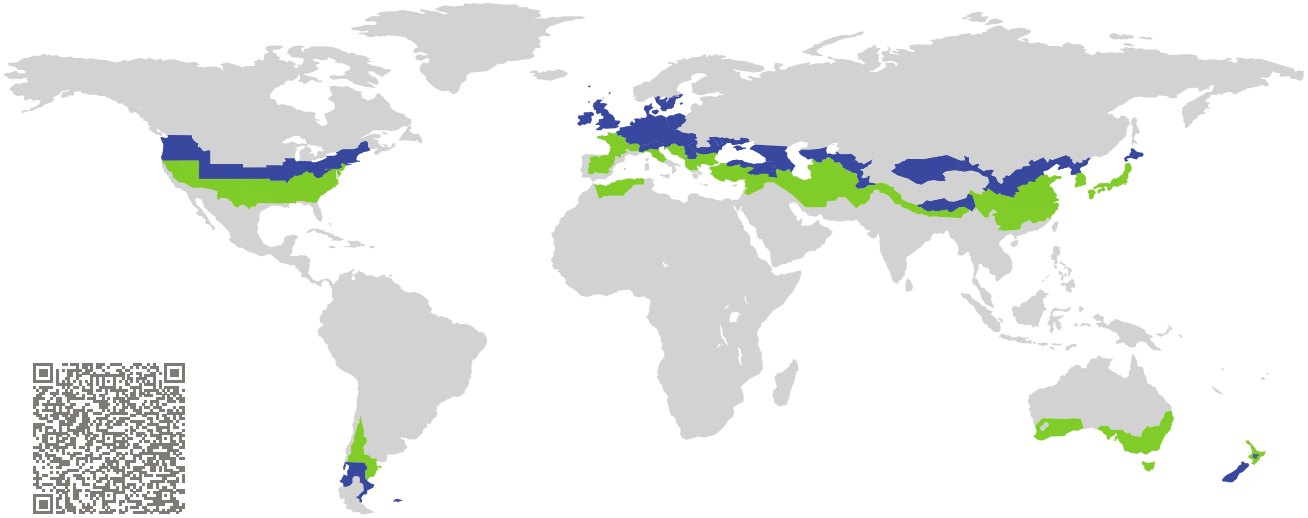

| | |
|---|---|
| Category: | **Curtain Wall** |
| Manufacturer: | **The second Construction Co.,ltd of China Construction Eighth Engineering Division, Jinan, China** |
| Product name: | **CSCEC82 PHCW 70** |

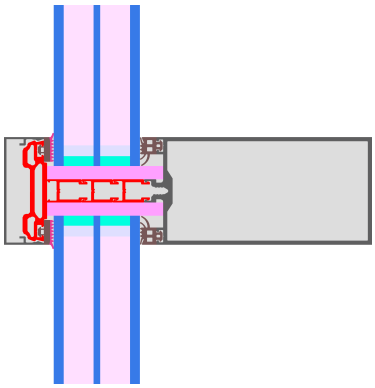

**This certificate was awarded based on the following criteria for the cool, temperate climate zone**

| | | | |
|---|---|---|---|
| Comfort | $U_{CW}$= 0.80 | $\leq$ | 0.80 W/(m$^2$ K) |
| | $U_{CW,\text{installed}}$ | $\leq$ | 0.85 W/(m$^2$ K) |
| | with $U_g$ | = | 0.70 W/(m$^2$ K) |
| Hygiene | $f_{Rsi=0.25}$ | $\geq$ | 0.70 |

cool, temperate climate

phA

CERTIFIED COMPONENT

Passive House Institute

| Passive House efficiency class | phE | phD | phC | phB | phA |
|---|---|---|---|---|---|

www.passivehouse.com

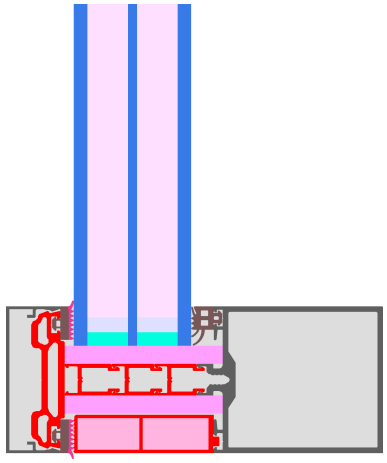

Calculation model

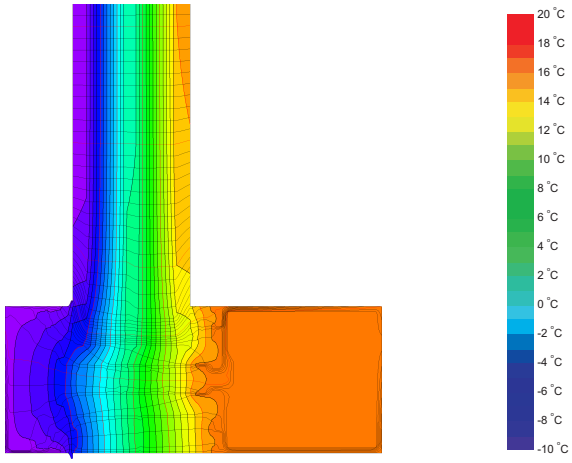


Isothermal

## Description

Curtain wall facade made from aluminum and a width of 65 mm; Isolator made from XPET (0,030 W/(mK)) and interlocking polyamid elements (0,3 W/(mK)); pressure plate made from polyamid and cover plate made from aluminium. A screw distance of 30 cm was used for the simulation and a corresponding chi-value of 0.002 W/K was determinded. The glass carriers are mainly also made from polyamid with a small stainless steel part. The corresponding chi-value is 0.019 W/K. Pane thickness: 52 mm (6/18/4/18/6), rebate depth: 30 mm. Spacer: Technoform-Spacer SP16 with butyl as secondary seal.

## Explanation

The element U-values were calculated for the test element size of 1.20 m × 2.50 m with $U_g$ = 0.70 W/(m$^2$ K). If a higher quality glazing is used, the element U-values will improve as follows:

| | | | | | | |
|---|---|---|---|---|---|---|
| Glazing | $U_g$ = | 0.70 | 0.68 | 0.58 | 0.52 | W/(m$^2$ K) |
| | | ↓ | ↓ | ↓ | ↓ | |
| Element | $U_{CW}$ | 0.80 | 0.78 | 0.69 | 0.63 | W/(m$^2$ K) |

Transparent building components are sorted into efficiency classes depending on the heat losses through the opaque part. The frame U-Values, frame widths, thermal bridges at the glazing edge and the glazing edge lengths are included in these heat losses. A more detailed report of the calculations performed in the context of certification is available from the manufacturer.
The Passive House Institute has defined international component criteria for seven climate zones. In principle, components that have been certified for climate zones with higher thermal requirements may also be used in climates with less stringent requirements. In a particular climate zone it may make sense to use a component of a higher thermal quality which has been certified for a climate zone with more stringent requirements.

Further information relating to certification
can be found on www.passivehouse.com and passipedia.org.

| Frame values | | Frame width $b_f$ mm | $U$-value frame $U_f$ [1] W/(m² K) | $\Psi$-glazing edge $\Psi_g$ W/(m K) | Temp. Factor $f_{Rsi=0.25}$ [-] |
|---|---|---|---|---|---|
| Mullion fixed | (0M1) | 65 | 0.87 | 0.031 | 0.80 |
| Transom fixed | (0T1) | 65 | 0.86 | 0.030 | 0.79 |
| Bottom fixed | (FB1) | 65 | 0.99 | 0.030 | 0.78 |
| Top fixed | (FH1) | 65 | 0.99 | 0.030 | 0.78 |
| Lateral fixed | (FJ1) | 65 | 1.00 | 0.030 | 0.79 |
| Spacer: Technoform-Spacer SP16 | | | | Secondary seal: Butyl | |

Thermal glass carrier bridge[2] $\chi_{GT}$ = 0.019 W/K

## Validated installations

### Ventilated facade (fixed glazing)

$U_{Wall}$ = 0.13 W/(m² K)

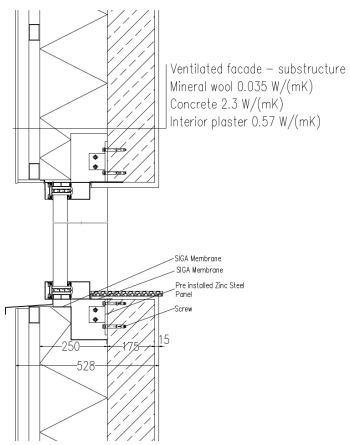


| $\Psi_{install}$ | W/(m K) |
|---|---|
| Top | 0.016 |
| Left | 0.012 |
| Right | 0.012 |
| Bottom | 0.027 |

$U_{W,installed}$ = 0.83 W/(m² K)

### Exterior insulation and finishing system (EIFS) (fixed glazed)

$U_{Wall}$ = 0.13 W/(m² K)

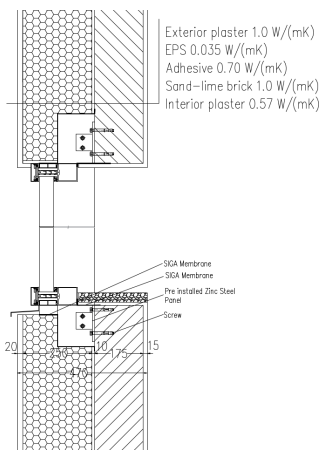


| $\Psi_{install}$ | W/(m K) |
|---|---|
| Top | 0.016 |
| Left | 0.012 |
| Right | 0.012 |
| Bottom | 0.027 |

$U_{W,installed}$ = 0.83 W/(m² K)

### Cavity wall (fixed glazing)

$U_{Wall}$ = 0.13 W/(m² K)

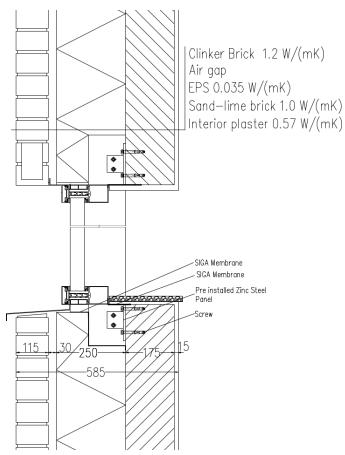


| $\Psi_{install}$ | W/(m K) |
|---|---|
| Top | 0.016 |
| Left | 0.012 |
| Right | 0.012 |
| Bottom | 0.029 |

$U_{W,installed}$ = 0.84 W/(m² K)

[1] Includes $\Delta U$ = 0.10 W/(m² K). Determined through 3D FEM simulation
[2] Determined through 3D FEM simulation. Glass carrier type: GRP & stainless steel