CERTIFICATE

Certified Passive House Component

Component-ID 2282cw03 valid until 31st December 2025

Passive House Institute
Dr. Wolfgang Feist
64283 Darmstadt
Germany

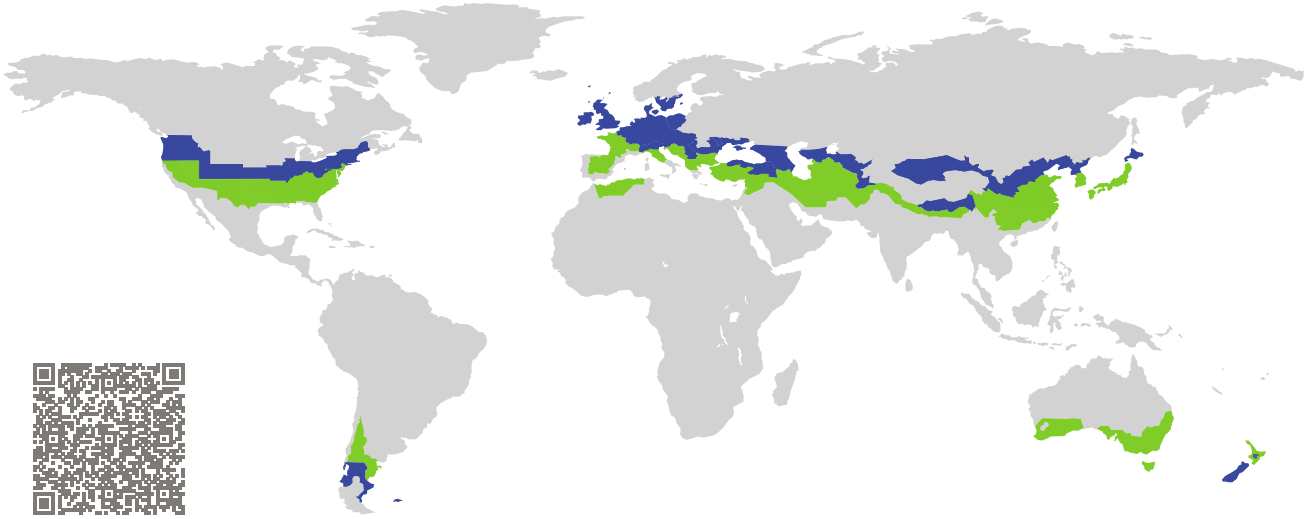

Category:	**Curtain Wall**
Manufacturer:	**Wangmei Industrial Group Co., Ltd, Xingtai City, Hebei Province, China**
Product name:	**WM-P60**

This certificate was awarded based on the following criteria for the cool, temperate climate zone

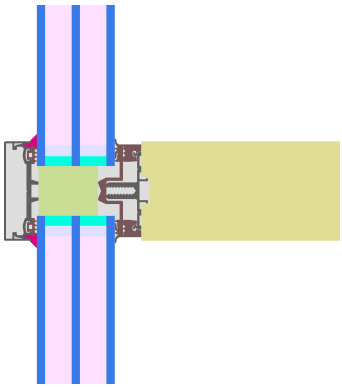

Comfort	U_{CW} = 0.80	$\leq$	0.80 W/(m² K)
	$U_{CW,installed}$	$\leq$	0.85 W/(m² K)
	with U_g	=	0.70 W/(m² K)
Hygiene	$f_{Rsi=0.25}$	$\geq$	0.70

cool, temperate climate

phA

CERTIFIED COMPONENT

Passive House Institute

Passive House efficiency class	phE	phD	phC	phB	phA

www.passivehouse.com

Wangmei Industrial Group Co., Ltd
500 meters west of the intersection of Jingguang Road and Weisan Road in Shahe City, 54100 Xingtai City, Hebei Province, China
☎ 18233151181 | ✉ zhangjingxin330@qq.com | |

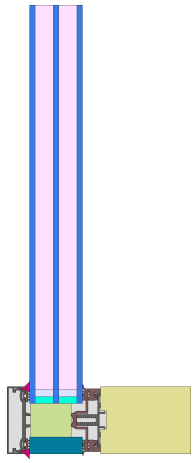

Calculation model

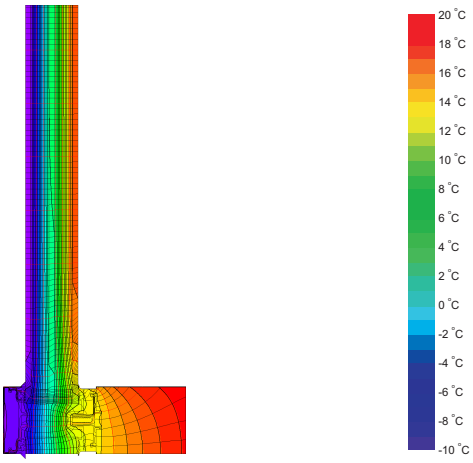

Isothermal

Description

Timber construction (pine wood 0.13 W/(mK)), aluminium covering and pressure plate, PE-insulation in the glazing rebate (0.038 W/(mK)), plastic glass carrier fixed with stainless steel screws. Pane thickness: 47 mm (5/16/5/16/5), rebate depth: 15 mm, spacer: Technoform SP 16 with butyl secondary seal.

Explanation

The element U-values were calculated for the test element size of 1.20 m × 2.50 m with U_g = 0.70 W/(m^2 K). If a higher quality glazing is used, the element U-values will improve as follows:

Glazing	U_g =	0.70	0.64	0.58	0.52	W/(m^2 K)
		↓	↓	↓	↓	
Element	U_{CW}	0.80	0.75	0.69	0.64	W/(m^2 K)

Transparent building components are sorted into efficiency classes depending on the heat losses through the opaque part. The frame U-Values, frame widths, thermal bridges at the glazing edge and the glazing edge lengths are included in these heat losses. A more detailed report of the calculations performed in the context of certification is available from the manufacturer.

The Passive House Institute has defined international component criteria for seven climate zones. In principle, components that have been certified for climate zones with higher thermal requirements may also be used in climates with less stringent requirements. In a particular climate zone it may make sense to use a component of a higher thermal quality which has been certified for a climate zone with more stringent requirements.

Further information relating to certification
can be found on www.passivehouse.com and passipedia.org.

Frame values		Frame width b_f mm	U-value frame U_f [1] W/(m² K)	Ψ-glazing edge Ψ_g W/(m K)	Temp. Factor $f_{Rsi=0.25}$ [-]
Mullion fixed	(0M1)	60	1.00	0.033	0.74
Transom fixed	(0T1)	60	1.00	0.033	0.74
Bottom fixed	(FB1)	60	0.98	0.032	0.73
Top fixed	(FH1)	60	0.98	0.032	0.73
Lateral fixed	(FJ1)	60	0.98	0.032	0.73
Spacer: Technoform-Spacer SP16				Secondary seal: Butyl	

Thermal glass carrier bridge[2] χ_{GT} = 0.004 W/K

Validated installations

Formwork blocks (fixed)

U_{Wall} = 0.15 W/(m² K)

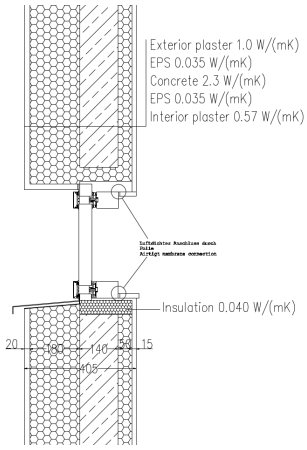

$\Psi_{install}$	W/(m K)
Top	0.028
Left	0.027
Right	0.027
Bottom	0.035

$U_{W,installed}$ = 0.85 W/(m² K)

Lightweight timber (fixed glazed)

U_{Wall} = 0.13 W/(m² K)

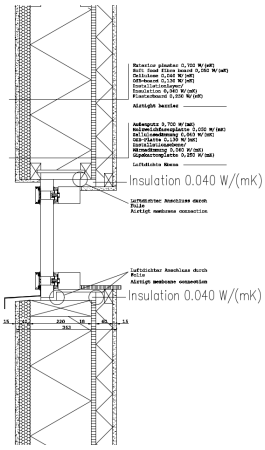

$\Psi_{install}$	W/(m K)
Top	0.029
Left	0.025
Right	0.025
Bottom	0.036

$U_{W,installed}$ = 0.85 W/(m² K)

Monolithic construction (fixed glazed)

U_{Wall} = 0.14 W/(m² K)

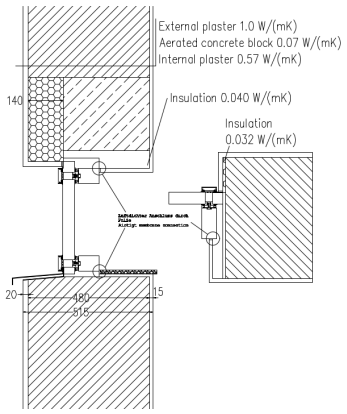

$\Psi_{install}$	W/(m K)
Top	0.090
Left	0.023
Right	0.023
Bottom	0.031

$U_{W,installed}$ = 0.84 W/(m² K)

[1] Includes ΔU = 0.30 W/(m² K). Standard value
[2] Standard value. Glass carrier type: Non-metallic glass carrier with screws