CERTIFICATE

Certified Passive House Component

Component-ID 2289wi03 valid until 31st December 2025

Passive House Institute
Dr. Wolfgang Feist
64283 Darmstadt
Germany

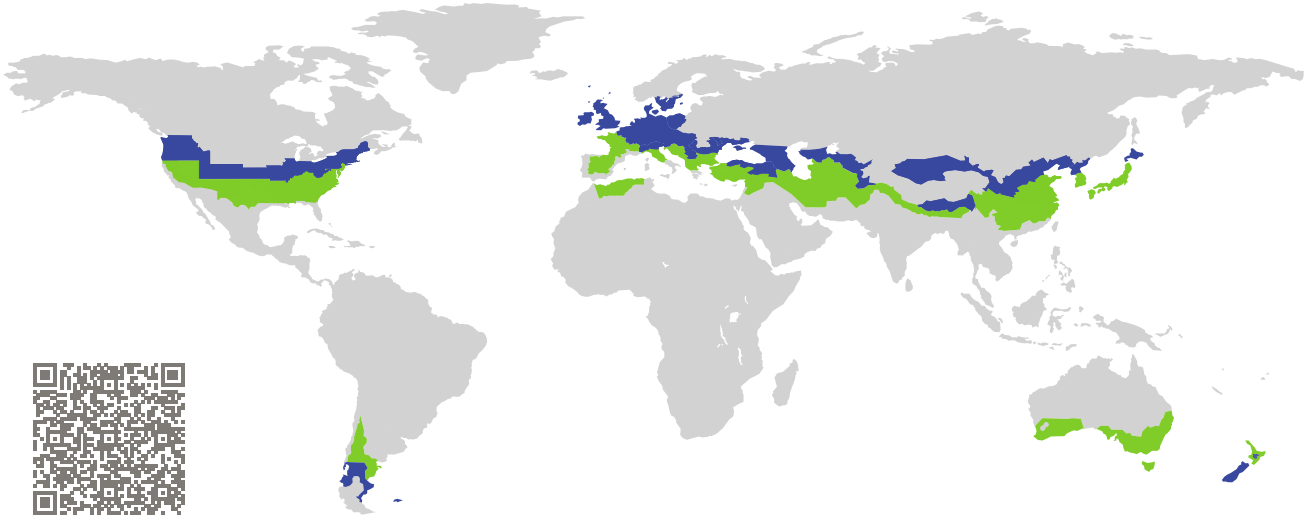

Category:	**Window Frame**
Manufacturer:	**REHAU Construction LLC, Leesburg, Virginia 20176, United States of America**
Product name:	**REHAU ARTEVO**

This certificate was awarded based on the following criteria for the cool, temperate climate zone

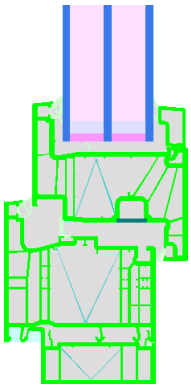

Comfort	$U_W = 0.80$	$\leq$	0.80 W/(m² K)
	$U_{W,\text{installed}}$	$\leq$	0.85 W/(m² K)
	with U_g	=	0.70 W/(m² K)
Hygiene	$f_{Rsi=0.25}$	$\geq$	0.70

cool, temperate climate

phB

CERTIFIED COMPONENT

Passive House Institute

Passive House efficiency class	phE	phD	phC	phB	phA

www.passivehouse.com

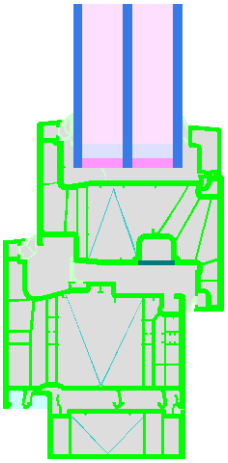

Calculation model

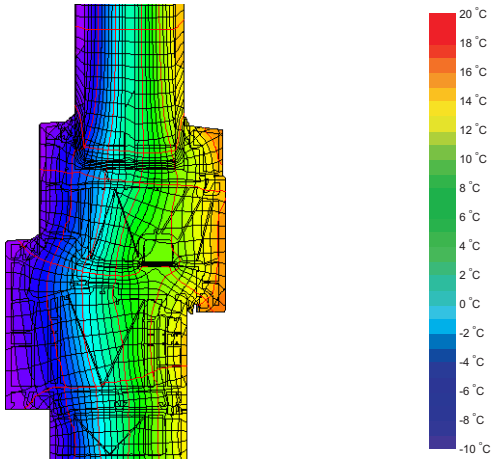

Isothermal

Description

PVC window frame with low emissivity bars (e=5%) for improving the thermal resistance. Maximum dimensions with the chosen reinforcement (w*h [m]): White: 1.11 * 2.30 or 1.20 * 1.80; coloured: 1.00 * 2.50 or 1.10 * 1.70. Pane thickness: 48 mm (4/18/4/18/4), rebate depth: 21 mm. Spacer: Multitech G.

Explanation

The window U-values were calculated for the test window size of 1.23 m × 1.48 m with U_g = 0.70 W/(m^2 K). If a higher quality glazing is used, the window U-values will improve as follows:

Glazing	U_g =	0.70	0.64	0.58	0.52	W/(m^2 K)
		↓	↓	↓	↓	
Window	U_W =	0.80	0.76	0.73	0.69	W/(m^2 K)

Transparent building components are classified into efficiency classes depending on the heat losses through the opaque part. The frame U-Values, frame widths, thermal bridges at the glazing edge, and the glazing edge lengths are included in these heat losses. A more detailed report of the calculations performed in the context of certification is available from the manufacturer.

The Passive House Institute has defined international component criteria for seven climate zones. In principle, components which have been certified for climate zones with higher requirements may also be used in climates with less stringent requirements. In a particular climate zone it may make sense to use a component of a higher thermal quality which has been certified for a climate zone with more stringent requirements.

Further information relating to certification
can be found on www.passivehouse.com and passipedia.org.

Frame values			Frame width b_f mm	U-value frame U_f W/(m^2 K)	Ψ-glazing edge Ψ_g W/(m K)	Temp. Factor $f_{Rsi=0.25}$ [-]
Mullion 2 casements	(2M1)		196	0.88	0.025	0.72
Bottom	(OB1)		149	0.85	0.025	0.76
Top	(OH1)		127	0.81	0.025	0.76
Lateral	(OJ1)		127	0.81	0.025	0.76
Spacer: MULTITECH G				Secondary seal: Polysulfide		

Validated installations

Formwork blocks (operable)

U_{Wall} = 0.15 W/(m² K)

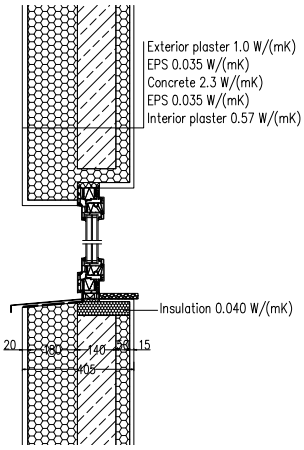

$\Psi_{install}$	W/(m K)
Top	0.000
Side	0.000
Bottom	0.036

$U_{W,installed}$ = 0.83 W/(m² K)

Lightweight timber (operable)

U_{Wall} = 0.13 W/(m² K)

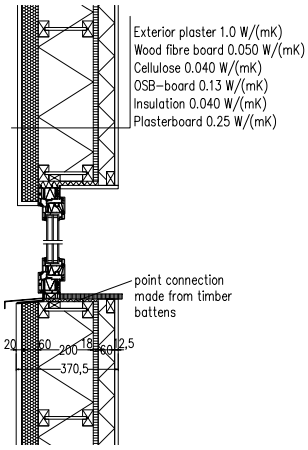

$\Psi_{install}$	W/(m K)
Top	0.009
Side	0.009
Bottom	0.023

$U_{W,installed}$ = 0.84 W/(m² K)

Exterior insulation and finishing system (EIFS) (operable)

U_{Wall} = 0.13 W/(m² K)

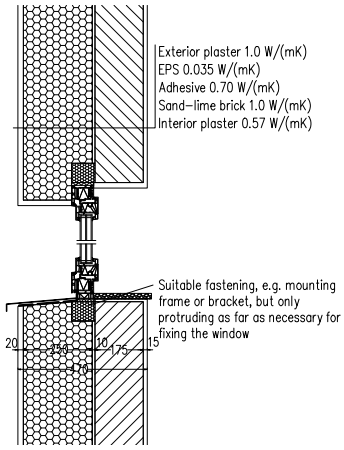

$\Psi_{install}$	W/(m K)
Top	–0.001
Side	–0.001
Bottom	0.035

$U_{W,installed}$ = 0.82 W/(m² K)

Exterior insulation and finishing system (EIFS) (operable) 2

U_{Wall} = 0.13 W/(m² K)

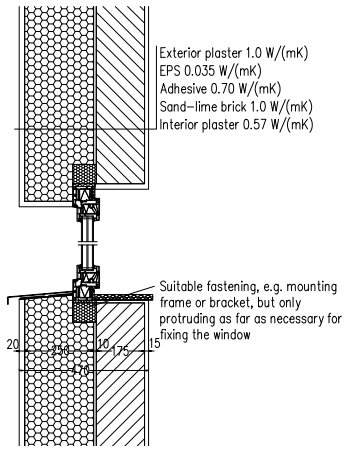

$\Psi_{install}$	W/(m K)
Top	–0.001
Side	–0.001
Bottom	0.014

$U_{W,installed}$ = 0.81 W/(m² K)